LC-131

3-channel Digital Input with Line Short Detection and 1-channel Relay Output Module

Features

- Power Relay Output
- Dry Contact Digital Input
- Digital Input With Line Short Detection
- +/-4 kV ESD Protection
- Tiny Form Factor with Easy Screw Mounting

Introduction

The LC-131 is an easy-to-use digital input module, equipped with 3-channel digital input, functions line short detection, and 1-channel relay output. The digital input type is dry contact, meaning that wiring is easy. There are two methods of controlling the relay outputs, either directly from the digital input or via a remote host. Settings, such as communication protocol and node address can be configured either via hardware or via software, depending on the situation. The module has also passed + / -4 kV ESD reliability test, and is designed to operate in harsh environments.

System Specifications

Communication	
Interface	RS-485
Format	N, 8, 1
Baud Rate	1200 ~ 115200 bps
Protocol	DCON, Modbus RTU
Node Addresses	96 ~ 127
Connector	RJ-11 (6P4C or 6P6C)
LED Indicators	
Power	1 LED as Power Indicator
EMS Protection	
ESD (IEC 61000-4-2)	+/-4 kV contact for each Terminal
	+/-8 kV Air for Random Point
EFT (IEC 61000-4-4)	+/-4 kV for Power Line
Power	
Reverse Polarity Protection	Yes
Powered from Terminal Block	Yes, 10 ~ 30 VDC
Consumption	0.8 W Max.
Mechanical	
Dimensions (W x L x H)	52 mm x 98 mm x 27 mm
Installation	Screw Mounting
Environment	
Operating Temperature	-25 ~ +75°C
Storage Temperature	-30 ~ +80°C
Humidity	10 ~ 95% RH, Non-condensing

I/O Specifications

Digital Input		
Channels		3
Type		Dry Contact
On Level		Close to GND
Off Level		Open
Counters	Max. Count	16-bit (65535)
	Max. Input Frequency	100 Hz
	Min. Pulse Width	5 ms
Line Short Detection		Yes, optioned external terminal resistance of 1 KΩ is required
Relay Output		
Channels		1
Type		Power Relay, Form A (SPST N.O.)
Operating Voltage		250 VAC or 30 VDC
Max. Load Current		16 A (Res. load)
Operate Time		15 ms Max.
Release Time		5 ms Max.
Mechanical Endurance		10,000,000 OPS
Electrical Endurance		50,000 OPS
Power-on and Safe Value		Yes, programmable

Power and Communication

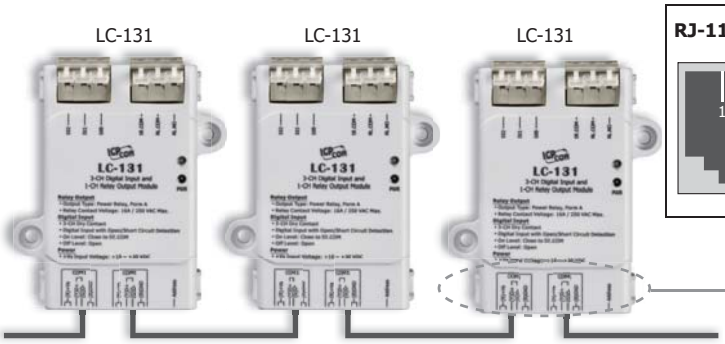

RS-485 and power input daisy chain using an RJ-11 connector

RJ-11 Connector	Pin	Descriptions	
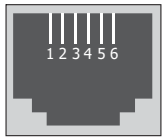	1	+VS	Power Input Voltage (+10 VDC ~ 30 VDC)
	2		
	3	DATA+	RS-485 Serial Communication Interface
	4	DATA -	
	5	GND	Ground
	6		

Bottom View

Applications

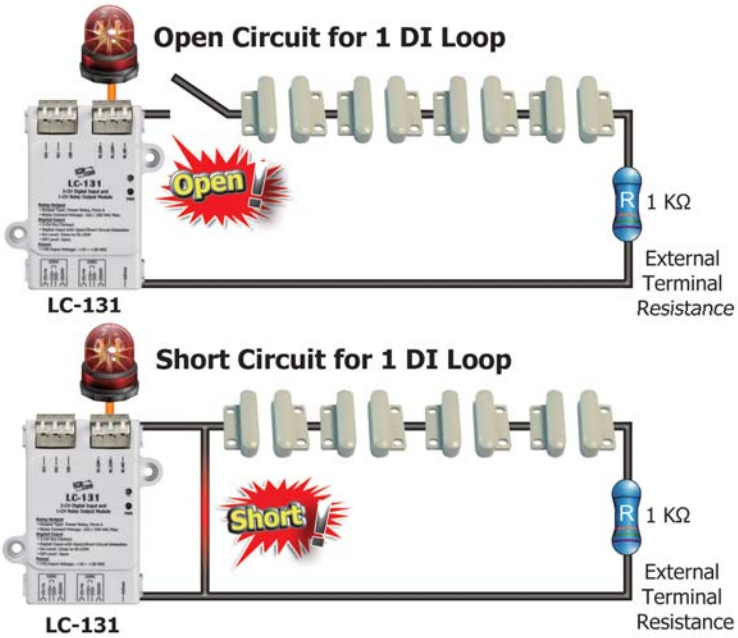

Configuration

DIP Switch Description			
ON DIP 1 2 3 4	SW1	ON	DCON Protocol
		OFF	Modbus RTU Protocol
	SW2	ON	Software Configuration
		OFF	Hardware Configuration
	SW3	ON	High Node Address
		OFF	Low Node Address
	SW4	ON	INIT Mode
		OFF	Normal Mode

Wire Connections

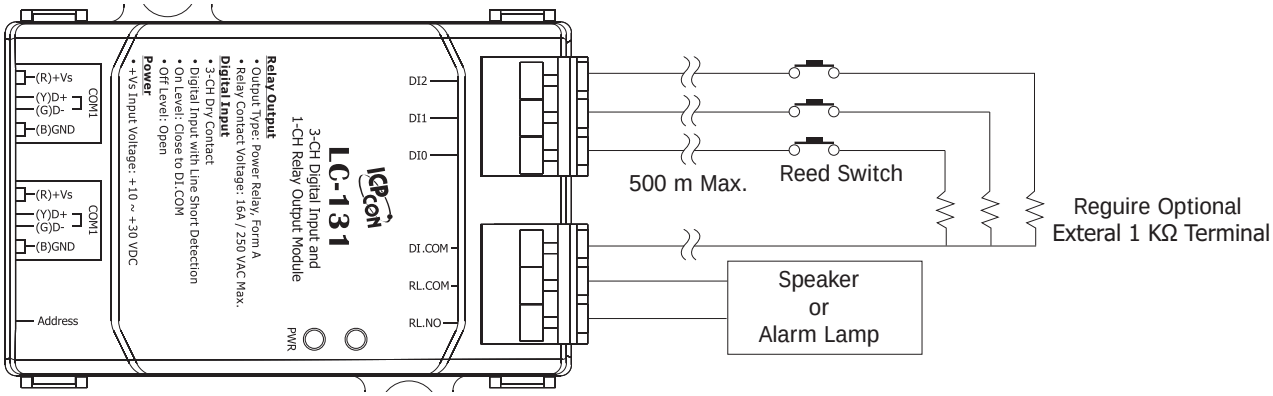

Ordering Information

LC-131 CR	3-channel Digital Input Module with Line Short Detection and 1-channel Relay Output (RoHS)
LC-131/DIN CR	3-channel Digital Input Module with Line Short Detection and 1-channel Relay Output (DIN Rail mount) (RoHS)

Accessories

	tM-7520U CR	RS-232 to RS-485 Converter (RoHS)
	tM-7561 CR	USB to RS-485 Converter (RoHS)
	1 KΩ, 0.1% DIP Resistors	For Line Short Fuction of LC-131, LC-131/DIN

	LC-485 CR	4 Channels RS-485 Active Hub (RoHS)
	TPD-280 CR	2.8" Touch HMI Device with RS-485 (RoHS)