alphamoisture SYSTEMS

DS1200-AMT-Ex
Dewpoint Hygrometer

User Manual

English

This manual should be kept with the **Model DS1200-AMT-Ex**

Please read this manual carefully from the beginning.

You must observe the safety information on page 2 before installation.

Document Reference: 2124 - Issue 1 - 1st AUGUST 2014

© Alpha Moisture Systems Ltd. 2014

Contents

Section

1. Warnings and Safety Information
- 1.1 Definitions: 3
- 1.2 Receipt and Unpacking 3
- 1.3 Environment 3
- 1.4 Normal Operation 3
- 1.5 Cleaning 3

2. General Information 4

3. System Description 5
- 3.1 Model DS1200 5
- 3.2 Model DS1200-AMT-Ex System Application: 5
- 3.3 DS1200 Mounting: 5
- 3.4 Installing the Instrument into a Panel 5

4. Wiring 6
- 4.1 Model DS1200 Power Supply 6
- 4.2 AMT Sensor Cable 6
- 4.3 Alarm Cable 6
- 4.4 Analogue Output Cable 6
- 4.5 Rear Connections: 6

Wiring continued. 7
- 4.6 For Wiring the PR5104BB2A/B Isolator to the Model AMT-Ex connection 7
- 4.7 Wiring the Model AMT-Ex to the Model DS1200 7

5. Gas Compatibilities 7

6. Installing the Model AMT-Ex in an air/gas sampling system 8
- 6.1 Piping installation Schematic 9
- 6.2 Piping schematic component index 9-10

7. Installing and Commissioning the Model AMT-Ex 10-11
- 7.1 Operation 11
- 7.2 Commissioning 12
- 7.3 Setting the Alarm Trip Points 12
- 7.3 Setting the Alarm Trip Points continued. 12-13

8. Normal Operation 14
- 8.1 Analogue 4-20mA Mode (3-wire) 14
- 8.2 Autocal 14
- 8.3 Pre-conditioning the transmitter 14-15
- 8.4 Entering Autocal Mode 15
- 8.5 Adjust the autocal 15-16
- 8.6 Completing the autocal 16
- 8.7 Model AMT-Ex Range AutoCal Method Lookup Table 16
- 8.8 Faults/Errors 17

Graphical description of the autocal modes 18

9. Specifications 19
- 9.1 Model DS1200 Specifications: 19
- 9.2 Model AMT-Ex Specification 19-20
- 9.3 Single Isolator Specifications (1 and 2 Channels) 21
  - Mechanical specifications 21
  - Approvals 21
- 9.4 Applicable Standards 21
- 9.5 Model AMT-Ex Transmitter Intrinsic Safety Certification Standards: 21

10 Appendix A – Model AMT-Ex / PR5104BB2A / Model DS1200 - Installation Schematics. 22
2 x Model AMT-Ex's / PR5104BB2B / 2 x Model DS1200 's 23

11 Appendix B – PR5104BB2A/B to Model AMT-Ex Connections 24

12 Appendix C - Model AMT-Ex with Connector, General Arrangement 25

13 Appendix D – Transmitter Holder General Arrangement 26

14 Contact Information 27

PLEASE NOTE: Throughout this manual -
"**Model DS1200-AMT-Ex**" is the "Dewpoint Hygrometer" (Without isolator)
"**Model DS1200**" is the "Display Unit"
"**Model AMT-Ex**" is the "Dewpoint Transmitter"

1. Warnings and Safety Information

Warning!

- The **Model DS1200** is designed for connection to hazardous electric voltages. Ignoring this warning can result in severe personal injury or mechanical damage. To avoid the risk of electric shock and fire, the safety instructions of this manual must be observed and the guidelines followed. The specifications must not be exceeded, and the **Model DS1200** must only be applied as described in the following pages. Prior to commissioning of the **DS1200-AMT-Ex**, this manual must be examined carefully. Only qualified personnel (technicians) should install the **Model DS1200-AMT-Ex**.
- If the Model DS1200-AMT-Ex is used in a manor not specified by the manufacturer, the protection provided by the equipment may be impaired.

Warning!

- Until the **Model DS1200-AMT-Ex** is installed, do not connect hazardous voltages to the **Model DS1200** display unit.
- Trouble shooting of the **Model DS1200-AMT-Ex** should only be carried out when disconnected from the mains power supply and under ESD safe conditions.
- Repair of the **Model DS1200-AMT-Ex** must be done by Alpha Moisture Systems, or authorised distributors, only.

Warnings!

The **Model AMT-Ex** is intrinsically safe and certified to ATEX and IECEx standards. Therefore, it can be used in hazardous areas with an isolator installed in the safe area with the **Model DS1200**. See pages 22 & 24 for wiring details.

It is the responsibility of the user to ascertain the suitability of the **Model AMT-Ex** for use in hazardous areas. Risk assessments should be performed prior to use, taking into account the **Model AMT-Ex** certifications, and the location and the gas being monitored etc.

Certification: ATEX Marking –

II 1G Ex ia IIC T4 Ex iaD IIC T4 20 T135°C (-20°C ≤ Ta ≤ +60°C)

Certification: IECEx Marking –

IECEx BAS 07.0080 Ex ia IIC T4 Ex iaD IIC T4 20 T135°C (-20°C ≤ Ta ≤ +60°C)

1.1 Definitions

- Hazardous voltages have been defined as the ranges: 75 to 1500 volt DC, and 50 to 1000v volt AC.
- Technicians are qualified persons educated or trained to mount, operate, troubleshoot and technically correct in accordance with safety regulations.
- Operators are persons being familiar with the content of this manual, able to adjust and operate the **Model DS1200-AMT-Ex** during normal operation.

1.2 Receipt and Unpacking

- Unpack the **Model DS1200-AMT-Ex** when it is ready to install and without damaging it. Always follow the manual and ensure it is always accessible to the installer and operator.
- Check at the receipt of the **Model DS1200-AMT-Ex** whether the type corresponds to the one ordered.

1.3 Environment

- Avoid direct sunlight, dust, high temperatures, mechanical vibrations and shock, as well as rain and heavy moisture. If avoidance of high moisture is not possible, employ ventilation, rather than increased temperature to prevent condensation.
- The **Model DS1200-AMT-Ex** falls under the installation Category II, pollution Degree 1, and Insulation Class II.

1.4 Normal Operation

- Operators are only allowed to adjust and operate the **Model DS1200-AMT-Ex** when safely fixed to a panel, thus avoiding the danger of personnel injury and damage. This means there is no electrical shock hazard, and the **Model DS1200** front panel is easily accessible.

1.5 Cleaning

- When disconnected, the **Model DS1200** may be cleaned with a cloth moistened with distilled water or ethyl alcohol.

2. General Information

The **Model-AMT-Ex** is a 3 wire 4-20mA transmitter, used for continuous measurement of moisture in a process gas or compressed air and can be configured to output a linear signal for any of the following moisture units:- °C or °F dewpoint, ppm(v), ppb(v), g/m3, and lb/MMSCF.

The long lasting sensing element offers excellent sensitivity, repeatability and response speed. Each unit is supplied with a Certificate of Calibration, traceable to International Humidity Standards, validating accuracy to ± 2°C dew point.

Model AMT-Ex is an ATEX certified, intrinsically safe, dewpoint transmitter, for hazardous areas when installed with the appropriate isolator such as a PR5104BB2A(&B) in the safe area.

The transmitter also incorporates an Automatic Calibration (AUTOCAL) feature, which allows the user to carry out field calibration / span check. The AUTOCAL feature is operated by means of two small buttons built within the transmitter enclosure. To avoid tamper, the buttons are locked in normal operation and can only be activated by following a special routine described later in this manual.

The integral RISC microprocessor circuitry of the **Model AMT-Ex** allows high resolution with advanced self-diagnostics for fault conditions. It also enables periodic re-calibration of the moisture sensor, storing calibration data within the fully self-contained unit.

The mechanics of the **Model AMT-Ex** have been designed to cope with extreme environmental conditions. The rugged stainless steel construction offers protection to IP66 (NEMA4X), with the transmitter electrical connections made via secure industrial type connector.

The Model AMT-Ex can withstand 35,000 kPa (350bar) maximum pressure and, by employing low resistance cable, the transmitter can be located in excess of 1000 meters, from the safe area location of the signal isolator.

Designed with the operator in mind, for reliable and accurate measurements, the **Model AMT-Ex** is extremely easy to install and operate, requiring little or no maintenance.

The **Model AMT-Ex** is supplied with a Certificate of Calibration, an instruction manual and 2m connection cable. Longer cables are available - See datasheet for details.

3 System Description

3.1 Model DS1200

- 4-digit 14 segment LED display
- Loop powered **Model AMT-Ex**, **Model DS1200**
- 2 Alarm Relays
- mA Output and with a universal voltage supply

3.2 Model DS1200-AMT-Ex System Application

- The **Model DS1200** displays a digital readout of moisture content, derived from the **Model AMT-Ex** and **PR5104BB2A (or B)** signal isolator.

3.3 DS1200 Mounting

- Only technicians who are familiar with the technical terms, warnings, and instructions in the manual and who are able to follow these should connect the instrument.
- Should there be any doubt as to the correct handling of the **Model DS1200**, please contact your local distributor.
- Mounting and connection of the **Model DS1200** should comply with the national legislation for the mounting of electric materials, i.e. wire cross-section, protective fuse, and location. Descriptions of Input / Output and supply connections are shown in the block diagram on **page 6** and the instrument top label.
- The maximum size of the protective fuse is 10A and, together with the power switch, it should be easily accessible and close to the **Model DS1200**. The power switch should be marked with a label indicating it will turn OFF the voltage to the **Model DS1200.**
- To be mounted in front panels. The included rubber packing must be mounted between the panel cutout and the display front to obtain IP65 (NEMA 4) ingress protection.

3.4 Installing the Instrument into a Panel

- Make a cut-out in the donor panel 92.0/92.8 x 45.0/45.6mm (DIN 43700).
- The maximum panel thickness is 10mm and, if an effective IP65 weatherproof seal is required, the minimum recommended panel thickness is 1.6mm.
- Pass the instrument cabinet through the cut-out in the donor panel and slide the panel clamp over the instrument, from the back.
- Turn the Red panel clamp screws until the instrument is clamped in position.

The screws must be tightened sufficiently to affect a seal between the front of the donor panel and the back of the instrument bezel, but never over tightened to the point of fracturing the panel clamp or instrument case.

NOTE: Wires are retained by screws. Ensure that the exposed section of the wire is fully inserted and that no loose strands are exposed.

4. Wiring

4.1 Model DS1200 Power Supply

- Connect the power supply cable to the green 2 terminal block marked 31 and 32 (no polarity).
- The power supply should be 22 to 253 VAC @ 50/60Hz or 20 to 300 VDC

4.2 Model AMT-Ex connection via PR5104BB2A (or B)

- Refer to Section 11, Appendix A and B for wiring the **Model AMT-Ex** to the signal isolator and wiring from the signal isolator to the **Model DS1200** display unit. Route the signal cable to the intended site of the **Model AMT-Ex.**

Note : - Do not install the sensor at this time. Wait until the commissioning stage as described later

4.3 Alarm Cable

- Make the appropriate connections, noting the normally open and normally closed relay contact positions.

4.4 Analogue Output Cable

- Make the appropriate connections, ensuring that the correct polarity and the maximum load specification is strictly observed.

4.5 Rear Connections:

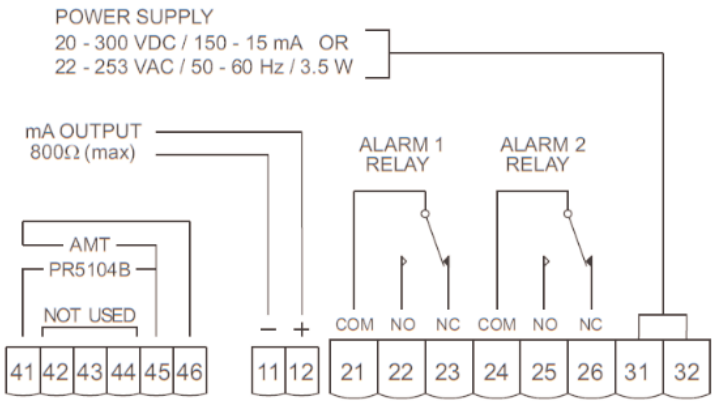

Wiring continued.

4.6 For wiring the PR5104BB2A/B Isolator to the Model AMT-Ex connection
See Appendix B on page 24.

4.7 Wiring the Model AMT-Ex to the Model DS1200

The **Model AMT-Ex** is a 3-Wire 4-20mA transmitter.
For typical electrical connections see Appendix **A & B:**

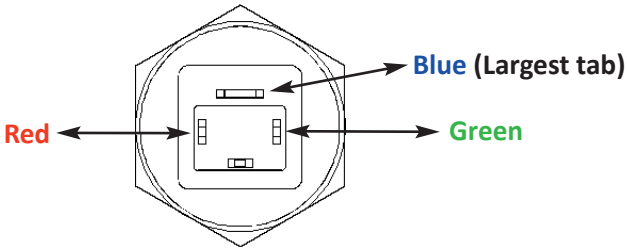

5 Gas Compatibilities

The **Model AMT-Ex** sensing elements are Al_2O_3 and therefore suitable for many different industrial and research applications. Most gases can be checked for their moisture content with no need for the calibration to be altered when changing between different gases, as the sensor operates only with reference to the water vapour content.
However, some gases **must** be avoided, as they are not compatible with the material used in the construction of the sensor. Ammonia (NH_3) and Chlorine (Cl) must be avoided at all times, even in small quantities. Hydrogen Chloride (HCl) also attacks the sensors very quickly. Some, less aggressive acidic gases, such as sulphur dioxide (SO_2), can be monitored, as long as the moisture content is low, generally less than 100ppm(v). If in doubt, please ask your supplier.

Sulphur hexaflouride (SF_6) has no effect on the sensor. If the gas has been exposed to arcing, however, it is possible that various acidic species will have been formed that will corrode the sensor. When testing SF_6 that may have been arced, therefore, an acidity test should be carried out first; if the gas proves to be acidic then the moisture test should not be carried out.

It is strongly recommended that the sample should not contain particulate matter, oil or other heavy hydrocarbon condensate. If these components contaminate the sample system and/or the measuring sensor, the system response time will be lengthened, although the sensor calibration will not be effected.

6 Installing the Model AMT-Ex in an air/gas sampling system

The piping installation schematic diagram (**see page 9**) shows all components that could be used in a dry gas measurement application. Not all the items shown will be required for every installation.

Care should be taken to ensure that the sample presented to the measuring sensor is not contaminated with any component that will damage, contaminate or affect the sensor in a way that will impair the system accuracy.

It is strongly recommended that the sample should not contain particulate matter, oil or other heavy hydrocarbon condensate. If these components contaminate the sample system and/or the measuring sensor, the system response time will be lengthened, although the sensor calibration will not be effected.

The sample must not contain ammonia, chlorine, ozone or any wet acid vapours or liquids as these will permanently damage the sensor and impair calibration accuracy.

The flow rate, although not critical to the sensor measurement, should be low enough to avoid abrasion to the sensor surface without being so low as to extend the system response time to an unacceptable level. In general, a flow rate of between 2 and 3 litres/min at NTP will give the right balance.

The sensor is a variable capacitor, which is directly affected by changes in partial pressure of water vapour. These changes that are proportional to the dew/frost point temperature are displayed on the instrument indicator.

The measuring sensor can be installed directly into the process line, but this does create problems with access for maintenance and calibration. It is for these reasons that we recommend that the sensor be installed in a bypass, fast loop or total loss sample system where the sensor is accessible without interrupting the main process flow line.

6.1 Piping installation Schematic

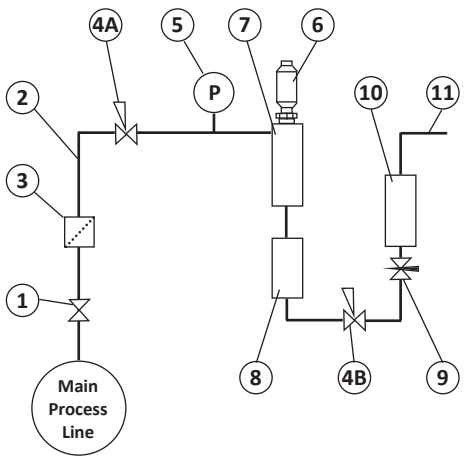

Notes

a. The sample point should be on the upper surface of the horizontal pipe, or from a vertical section of pipe, wherever possible.

b. The sample tube should run upwards from the sample point. If this is not possible then an inspection port or drain tap should be installed at the lowest point in the system.

6.2 Piping schematic component index

1) **Sample Isolation Valve** – This is a recommended item as it allows access to the sample system without interrupting the main process line.
2) **Sample Tube** – This should be stainless steel for dry air or gas applications but copper or carbon steel can be used where wetter gases are to be measured. If any section of the sample tube must be flexible then PTFE should be used. In most cases, 3mm OD (1/8”) is sufficient as it provides good system response time within minimum flow. 6mm OD (1/4”) tube can be used where pressure drops across the 3mm tube are too high.
3) **Filter Unit** – A filter unit is recommended when the samples are likely to contain particulate matter. If the air/gas sample contains heavy hydrocarbon condensate, the filter must be of the coalescing type with a drain. The filter unit should be positioned as close to the sample point as practical.

6.2 Piping schematic component index continued.

4) **Pressure Reduction Valve or Pressure Regulator** – If the sample is to be measured at atmospheric pressure then the valve 4A should be fitted and 4B omitted from the system. If the sample is to be measured at full line pressure and the exhaust vented to atmosphere, then valve 4B should be fitted and 4A omitted from the system.
   If measurements are to be taken at full line pressure and the sample is to be returned to a part of the main line or a vent, which is at a pressure higher than atmospheric, and the input to that line needs a controlled pressure, then both 4A and 4B will be required.
5) **Sample Pressure Gauge** – This is not a critical part of the moisture measurement but may be required if Dew/Frost point measurements are to be made at higher than atmospheric pressure.
6) **Measuring Sensor.**
7) **Sensor Holder.**
8) **Desiccant Chamber** – This item is required when the sampling is to be intermittent. When installed, it prevents the ingress of wet air to the sample system while the sample is not flowing, improving the response time.
9) **Flow Control Valve** – This can be a separate item or combined with the flow indicator.
10) **Flow Indicator** – The recommended sample flow is 2 to 3 litres/min at NTP.
11) **Sample Exhaust** – The exhaust can be vented to atmosphere or returned to the process line as discussed above.

7 Installing and Commissioning the Model AMT-Ex

It is advisable to carry out an initial purge routine of the sample loop, before installing the transmitter, in order to remove the possibility of sensor damage on start-up.

Refer to the sample system schematic on **page 9**. Open the inlet isolation valve slowly, until a small flow of air/gas at atmospheric pressure flows through the inlet pipe work to the transmitter holder and exhausts through the sensor entry port of the transmitter holder.

Allow this purge to continue for about 15 to 20 minutes to remove any residual moisture from the sample pipe work and components.

Close the inlet isolation valve and install the transmitter into the transmitter holder. Locate and secure the four-pin transmitter cable connector in positioned on the transmitter. Use the locking screw in order to affect a weatherproof seal.

NOTE: - The Plug and socket will only locate in one position, as the **GND** (ground) pin is different to the other three pins.

7 Installing and Commissioning the Model AMT-Ex continued.

Open the inlet valve slowly, again and, by opening all valves after the transmitter holder, allow a low-pressure purge through the whole sample system. (**Note.** If a closed by-pass loop is installed, this section of the procedure is not possible).

Set the required pressures and flows within the sample loop.

This completes the installation and commissioning but, on initial start-up, it could take several hours for the system to reach equilibrium.

WARNING: Leaving the transmitter installed in plant that will be unused for long periods of time will inevitably cause damage to the sensing element, due to condensation or air-bound contamination, rendering it inaccurate or unusable. It is, therefore, critically important to note that, if procedure in section 6 is being carried out as part of initial tests and/or plant acceptance trials, prior to shipping and storage, the transmitter should be removed from the system, following completion of the tests/trials and stored in its original packaging, ensuring that the desiccant capsule is in place, up to the time of final plant commissioning.

It is further recommended that, if the transmitter is to be stored for period of 12 months or more, a factory calibration verification be carried out, to ensure that any transit or storage damage that may have occurred, is identified and corrected, prior to final installation and commissioning.

7.1 Operation

- The system is designed to operate continuously, with a minimum amount of operator input.
- It is, however, advisable to inspect the sample loop periodically to ensure that the required pressures and flows are being maintained.
- The number and type of items employed in the sample loop will determine what, if any, other routine checks should be made. If, for instance, a filter is used, the filter element should be inspected periodically and changed when necessary.
- The instrument should not require any routine maintenance but if any mal function is suspected it is advisable to contact your local dealer.
- Should it be necessary, at any time or for whatever reason, to change either the instrument or sensor, it should be noted that the components of the **Model DS1200-AMT-Ex** system are fully and completely interchangeable provided that the corresponding instrument/sensor range is requested. The only adjustment necessary would be the alarm set points in the case of the instrument.
- While the sensor should give several years operation, it is advisable to confirm the calibration, from time to time, to ensure accurate operation of the system.

7 Installing and Commissioning the Model AMT-Ex continued.

7.2 Commissioning

- Switch the instrument power ON. The display will read “SE.BR“. This is the 'Sensor Wire Break' display condition.

7.3 Setting the Alarm Trip Points

- To activate the quick alarm settings screen press either the ”▲” or ”▼” buttons, while the **Model DS1200** is displaying the moisture level. The DS1200 will flash the “F.SET” message followed by a selection menu for Alarm 1 or 2 relay. Scroll to the required alarm and press the “OK” button. The DS1200 then displays the message “SETP” momentarily before displaying the current set point in % of scale.

  See next page for procedure:

7.3 Setting the Alarm Trip Points continued.

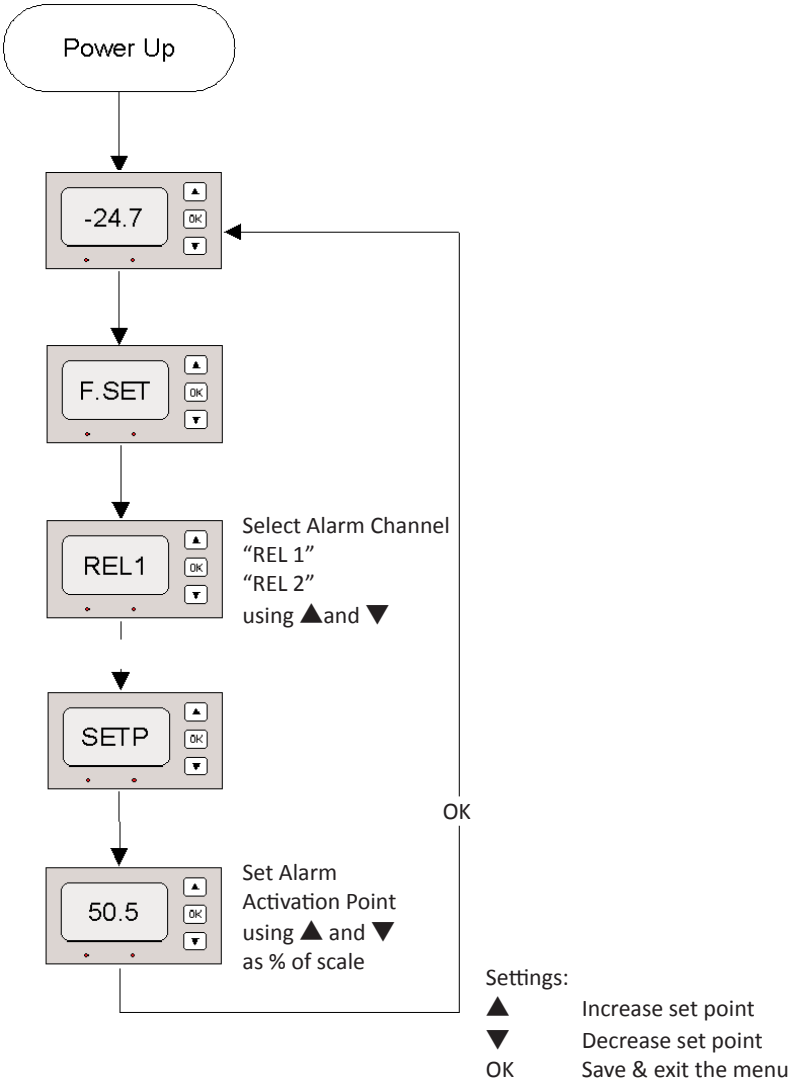

Note: - that on some Models, the Hysteresis is also settable.

8 Normal Operation

8.1 Analogue 4-20mA Mode (3-wire)

In normal operation, the transmitter will produce a 4-20mA signal, which is proportional to the level of moisture in the gas being monitored. The moisture reading is sampled and up dated once per second. The **Model AMT-Ex** has 3020 distinct steps over the 4 to 20mA range corresponding to a resolution of 0.005mA.

8.2 Autocal

Warning Do Not power down during the AutoCal process as this can lead to corruption of the AMTs memory.

AutoCal allows the user to ensure accuracy to the laboratory calibration by checking the span of the transmitter and correcting for any deviation. It should be operated periodically, every 2 to 3 months or when verification of the **Model AMT-Ex** is required.

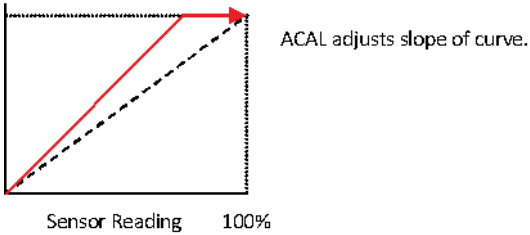

The **Model AMT-Ex** is supplied with an electronic autocal, which allows the calibration span of the transmitter to be adjusted. The autocal is controlled by the 2 buttons located on the side of the **Model AMT –Ex** labelled 'W' (wet) and 'D' (dry).

Note : - The **Model AMT-Ex** must be connected to an indicator or some device able to supply an accurate measurement of the mA output.

8.3 Pre-conditioning the transmitter

To perform the autocal, the transmitter needs to be removed from the process gas at which point the display/indicator will read the ambient dewpoint or full scale (if the ambient dewpoint level is above the range of the AMT-Ex). Expose the transmitter to the known autocal moisture level and allow the transmitter to attain equilibrium. (For technical questions and advice on the time taken to attain equilibrium Contact your **Model AMT-Ex** supplier). See next steps on **page 15.**

8.3 Pre-conditioning the transmitter continued.

Method 1: -

Expose to a known moisture level. (Applicable to all versions of **Model AMT-Ex** Transmitters)

If a known gas is available within the range of the transmitter, then the **Model AMT-Ex** can be AutoCaled against this value.

Method 2: -

Saturating method. (Only applicable to 0°C (32°F) and –20°C (-4°F) top end range **Model AMT-Ex** transmitters)

When the **Model AMT-Ex** sensing element is exposed to a dewpoint level above the top end range of the transmitter, the sensor will saturate and the transmitter can be Auto-Caled to 0°C or –20°C. For both 0°C and –20°C **Model AMT-Ex's**, ambient dewpoint is usually adequate to saturate the sensor.

Method 3: -

Set against Ambient moisture level. (Only applicable to 20°C (68°F) top end range **Model AMT-Ex** transmitters)

When the ambient dewpoint is known, then the **Model AMT-Ex's** can be AutoCaled to the ambient value.

8.4 Entering Autocal Mode

Once the transmitter has been pre-conditioned, the AutoCal Mode of the **Model AMT-Ex** can be activated. Press and hold the 'W' and 'D' buttons, simultaneously for 5 seconds. ONLY PRESS THE BUTTONS IF THE SENSOR IS PROPERLY PRE-CONDITIONED. FAILURE TO COMPLY WILL CORRUPT THE TRANSMITTERS CALIBRATION.

The attached 4-20mA display will (after the 5 seconds) indicate the bottom range of the **Model AMT-Ex** (or 4mA if reading current) for 5 seconds, confirming that autocal mode has been entered. The buttons should be released once the display indicates the bottom range.

After the 5 seconds delay the **Model AMT-Ex** will revert to the measured dewpoint and the buttons will be active.

8.5 Adjust the autocal

Use the 'W' and 'D' buttons to move the reading up or down so that the desired dewpoint is displayed.

8.5 Adjust the autocal continued.

Method 1: - Adjust the **Model AMT-Ex** reading until the indicator reads the known moisture level.

Method 2: - Adjust the **Model AMT-Ex** reading until the indicator reads 0°C or –20°C whichever is applicable to the **Model AMT-Ex** being AutoCaled

Method 3: - Adjust the **Model AMT-Ex** reading until the indicator reads the known ambient moisture reading.

8.6 Completing the autocal

Once the desired value is reached, the autocal process can be completed simply by leaving the buttons untouched for 30 seconds. After the 30 seconds, the display will indicate the bottom of the range for a period of 5 seconds and then the **Model AMT-Ex** will exit the autocal mode.

The **Model AMT-Ex** will now output the corrected dewpoint and can be reinserted into the process.

A graphical description of the autocal modes is given on **page 18**.

8.7 Model AMT-Ex Range AutoCal Method Lookup Table

Use the table below to decide which AutoCal methods are appropriate for your ModelAMT-Ex.

	Range		Methods Appropriate
-80 to –20°C	-112°F to –4°F		1 & 2
-110 to –20°C	-166°F to –4°F		1 & 2
-120 to –20°C	-184°F to –4°F		1 & 2
-65 to 0°C	-85°F to 32°F		1 & 2
-80 to 0°C	-112°F to 32°F		1 & 2
-100 to 0°C	-148°F to 32°F		1 & 2
-65 to 20°C	-85°F to 68°F		1 & 3
-100 to 20°C	-148°F to 68°F		1 & 3
-120 to 20°C	-184°F to 68°F		1 & 3
1-1000ppm(v)	0.1-100ppm(v)	0.01-10ppm(v)	1
1-1000ppb(v)			1
0.01-10g/m3	0.001to1g/m3		1
0.1-10lb/MMSCF	0.1-25lb/MMSCF	0.1-50lb/MMSCF	1

8.8 Faults/Errors

If the sensor is short-circuited, the transmitter will produce a constant **20.75mA** output.

If the sensor is open-circuited, the transmitter will produce a constant **20.50mA** output.

If the hardware develops a fault, the transmitter will produce **21.0mA** for 5 seconds after switch on and then continue to give an output.

Graphical description of the autocal modes

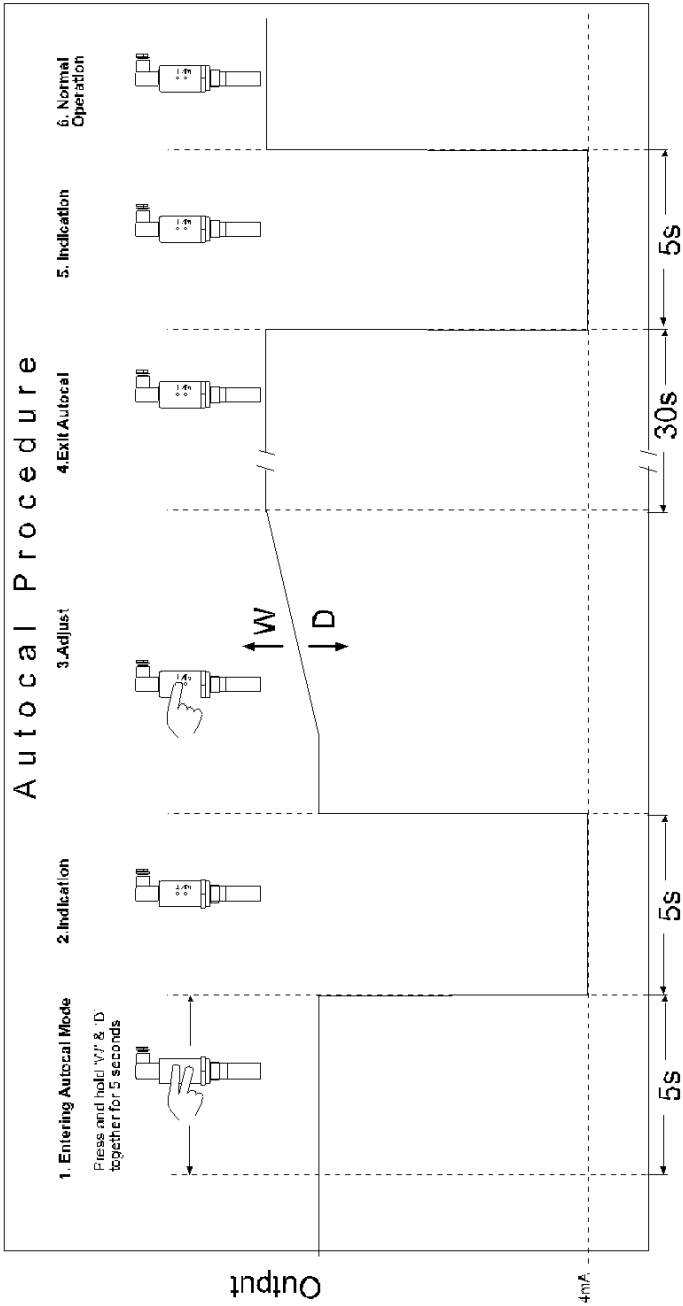

9 Specifications

9.1 Model DS1200 Specifications:

- Temperature operating range = -20°C to +60°C
- Power supply = 20 – 300 VDC, or 22 to 253 VAC 50 – 60 Hz
- 3.2W internal power consumption
- 3.5W maximum power consumption
- Isolation voltage test / operation = 2.3KVAC / 250 VAC
- Signal to noise ratio = Min 60dB (0-100kHz)
- Display Response time (0-90%, 100 to 10%) = 0.4s.
- Wire size, pin 45 & 46 (max) = 1 x 1.5mm2 stranded wire
- Wire size, others (max) = 1 x 2.5mm2 stranded wire
- Relative Humidity = < 95% RH
- Dimensions (HxWxD) = 48 x 96 x 120mm
- Cut out dimensions = 44.5 x 91.5mm
- Ingress Protection = (Front panel) IP65
- Weight = 230g
- Input
  - o From Model AMT-Ex
  - o Error detection = Cable loop break
- Display
  - o Display Readout = AMT range
  - o Scrolled error display
- Current Output
  - o Programmable signal ranges = 0…20 or 4…20mADC (Factory set)
  - o Load (max) 20mA / 800Ω / 16VDC
  - o Load stability ≤ 0.01 % of span / 100 Ω
- Relay
  - o Relay function = setpoint
  - o Hysterisis 1% of range
  - o Max voltage = 250 VRMS
  - o Max Current = 2A /AC
  - o Max AC power = 500VA
  - o Max current at 24 VDC = 1A

9.2 Model AMT-Ex Specification

Output Signal	:	4 to 20mA Linear
Operating Voltage	:	18V - 28V DC. Reverse polarity protected.
Maximum Series Resistance	:	= {40 x (Supply Voltage – 7)}Ω
Sensing element	:	Ultra High Capacitance - Aluminium Oxide Type
AutoCal	:	Field calibration / Span check facility.
Factory calibration	:	Supplied with Certificate of Calibration traceable to NPL / NIST
Accuracy	:	± 2°C dewpoint (NPL / NIST traceable for range -90°C to 20°C)

9.2 Model AMT-Ex Specification continued.

Temperature compensation	:	Temperature compensated for operating range.
Resolution	:	5 µA
Repeatability	:	Better than ±0.3°C dewpoint
Operating temperature	:	-20°C to +60°C
Storage Temperature	:	-20°C to +70°C
Operating Pressure	:	From 1kPa (0.01 barA) to Maximum 35,000kPa (350 barA)
Operating Humidity (External)	:	Maximum - 95% RH Non-condensing
Sample Flow Rate	:	Independent but ideally 2 to 5 litres per minute. Max: 25 litres/min.
Cable Terminations	:	IP66 (NEMA4X) rated, size C, DIN EN 175301 connector at the transmitter and other end terminated with bootlace ferrules.
Cable	:	Supplied with 2m standard cable. Nominal diameter 3.4mm, 92ohms/km.
Electromagnetic Compatibility (EMC):		Immunity: Complies with EN 61000-6-1:2001
Emissions	:	Complies with EN 61000-6-3:2000
Warm Up Time	:	10 seconds
Fault Conditions	Sensor Open Circuit	: Output drives to 20.50mA
	Sensor Short Circuit	: Output drives to 20.75mA
	System Error	: Output drives to 21.00mA
Isolation	:	Sensing Element connected to the 4-20mA loop but isolated from body.
Transmitter Enclosure	:	316 Stainless steel body with size C, DIN EN 175301 connector.
Sensor Protection	:	316 Sintered stainless steel filter - 50 micron
Probe Material (Wetted Parts)	:	316 Stainless Steel
Weatherproof Classification	:	IP66 / NEMA4X when Connector mated to Transmitter.
Mechanical Connection	:	3/4” UNF (16tpi) with integral Viton “O” ring seal.
Mechanical Warranty	:	24 months in case of faulty workman ship and defective parts.
Calibration Warranty	:	12 months subject to usage.
Weight	:	175grams (includes connector)
Protection	:	ATEX

9.3 Signal Isolator Specifications (1 and 2 Channels)

Part Number	:	PR5104BB2A/B
Supply voltage, universal	:	21.6...253 VAC, 50...60 Hz or 19.2...300 VDC

Mechanical specifications

Dimensions (HxWxD)	:	109 x 23.5 x 130 mm
DIN rail type	:	DIN 46277

Approvals

EMC	:	EN 61326-1
LVD	:	EN 61010-1
PELV/SELV	:	IEC 364-4-41 and EN 60742
ATEX	:	DEMKO 99ATEX126013
UL	:	UL 913, UL 508
GOST R	:	Yes
GOST Ex	:	Yes
DNV Marine	:	Stand. f. Certific. No. 2.4

9.4 Applicable Standards

- EMC 2004/108/EC
  - o Emissions and immunity = EN 61326
- LVD 73/23/EEC
  - o Low voltage = EN 61010-1
- UL
  - o Standard for Safety = UL 508

9.5 Model AMT-Ex Transmitter Intrinsic Safety Certification Standards:

EN 60079-0:2009 EN 60079-11:2012 EN 61241-11:2012

Ex Ex II 1GD Ex ia IIC T4 Ex iaD 20 T135^{0}C (-20^{0}C ≤ Ta ≤ +60^{0}C)

11 Appendix B – PR5104BB2A/B to Model AMT-Ex Connections

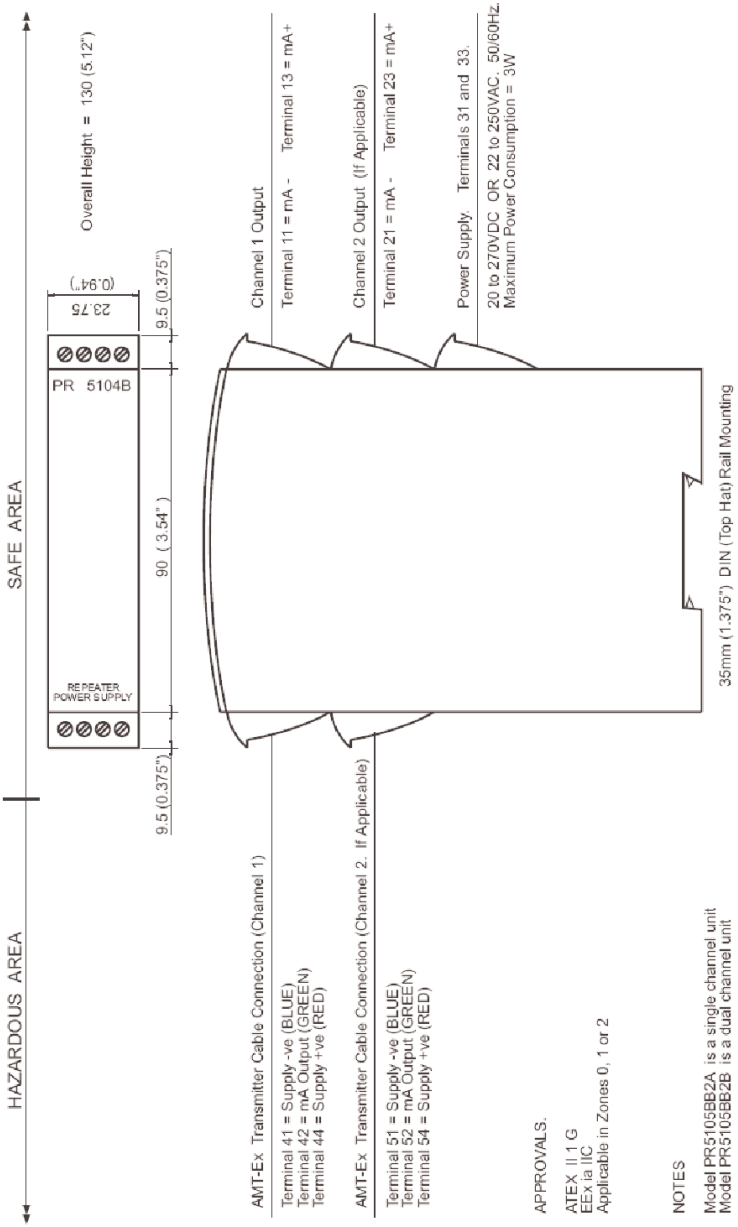

12 Appendix C - Model AMT-Ex with Connector, General Arrangement

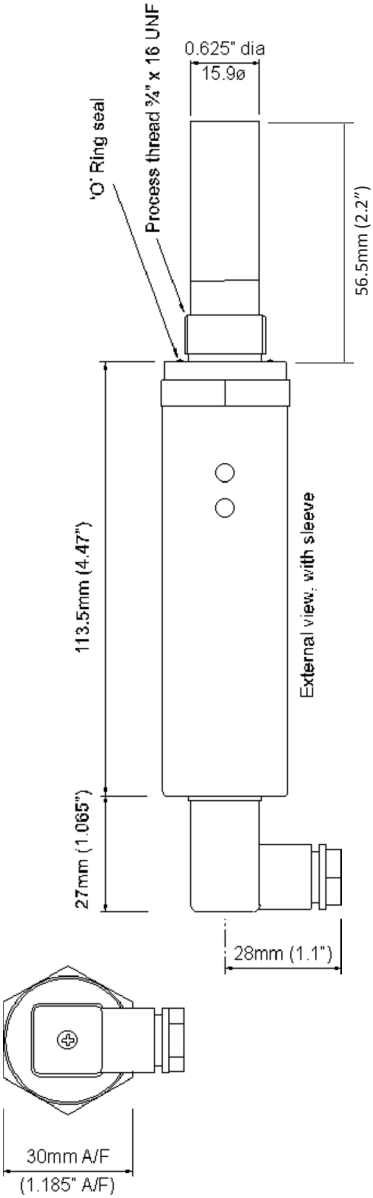

13 Appendix D – Transmitter Holder General Arrangement

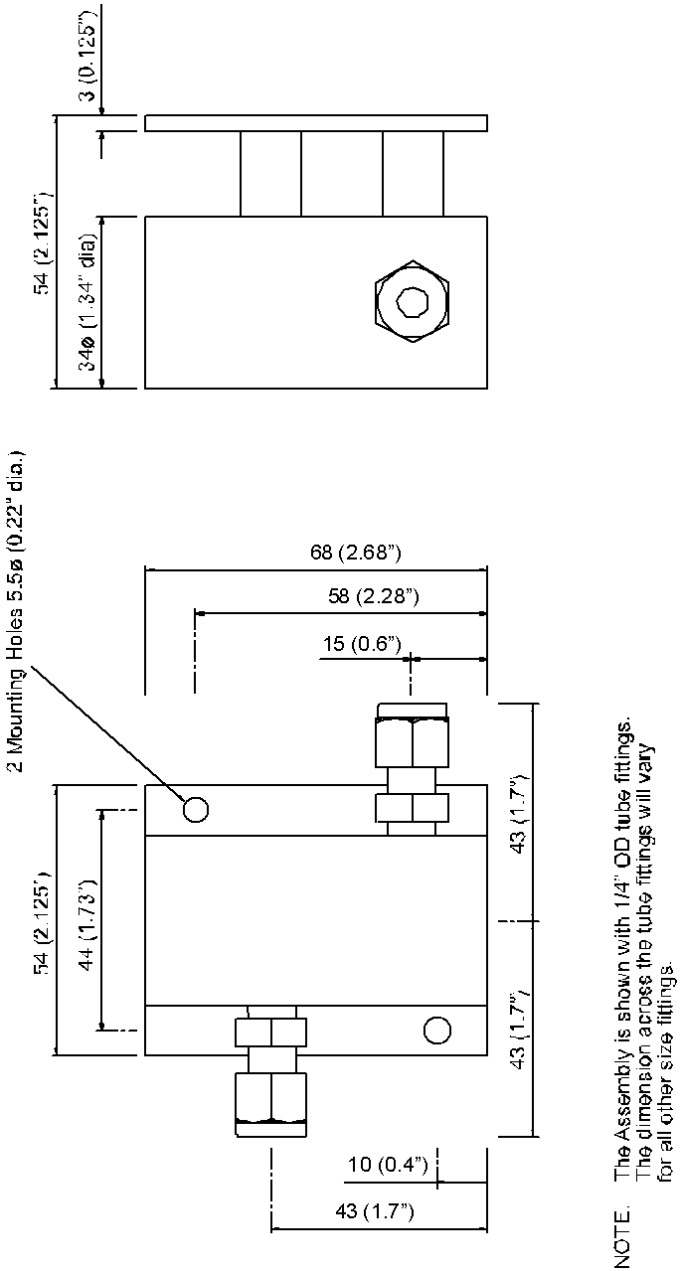

14 Contact Information

Head Office:

Alpha Moisture Systems
96 City Road
Bradford
West Yorkshire
BD8 8ES
United Kingdom

Tel: +44 (0) 1274 733100
Fax: +44 (0) 1274 733200

Email: info@amsystems.co.uk
Web: www.dew-point.com

Office Opening Hours:
Monday - Thursday
8.30am - 5.30pm GMT
Friday
8.30am - 5.00pm GMT

Notes: