**DL-110-E**

**DL-110-E-W**

**DL-120-E**

**DL-120-E-W**

## Features

- Illumination Measurement Range: 0 to 100,000 Lux
- Temperature Measurement Range: -20 to +60°C
- Humidity Measurement Range: 0 to 100% RH
- Able to store up to 600,000 records with date and time stamps Free Software Utility, iOS APP and Android App Included
- Supports the DCON, Modbus RTU, Modbus TCP and MQTT Protocols
- Includes RS-485/Ethernet Communication Interfaces
- Includes redundant power inputs: PoE (IEEE 802.3af, Class 1) and DC input
- Supports Web Configuration and Firmware Update via Ethernet
- IP 65 Protection Approval
- DIN-Rail or Wall Mounting

IP66

## Introduction

The DL-110-E / DL-120-E are Data Logger devices that can be used to record illumination, temperature, humidity and dew point data, together with date and time stamp information. Up to 600,000 downloadable records can be stored. Real-time data can be accessed from the DL-110-E / DL-120-E device from anywhere and at any time using the free Windows software, the iOS App or the Android App, as long as they are connected to the same local network as the Data Logger. The DL-110-E / DL-120-E supports popular industrial protocols such as DCON, Modbus RTU, Modbus TCP, as well as the emerging machine-to-machine (M2M)/IoT (Internet of Things) connectivity protocol – MQTT. The DL-110-E / DL-120-E Data Logger can be connected using a variety of communication interfaces, including Ethernet and RS-485, meaning that the device can be easily integrated into existing HMI or SCADA systems, and are easy to maintain in a distributed control system.

### ● Support the MQTT protocol for IoT Applications

The MQTT protocol is designed for the efficient exchange of real-time data between a sensor and a mobile device. It operates via TCP/IP and is in widest use today in "machine-to-machine" (M2M) and "Internet of Things" applications.

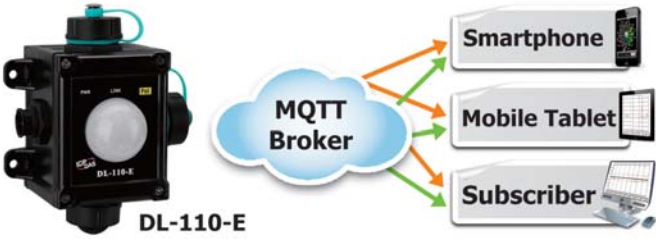


### ● Get Real-time Data Anywhere and Anytime

The iAir App is a free and easy to install application for iOS or Android Phones or Tablets, and can be used to obtain real-time data from DL-110-E / DL-120-E modules over a Wi-Fi network anytime and anywhere. The iAir App can access a DL-110-E / DL-120-E module either by specifying a specific IP address or by searching for all modules connected to the same Ethernet segment.

### ● Built-in Web Server

The built-in web server provides the ability to easily log in to the DL-110-E / DL-120-E module via a standard web browser, allowing users to monitor the data and configure the settings without the need to install any software on the terminal.

### ● Free and Powerful DL300 Utility

The DL-300 Utility can be used to configure a module and monitor real-time data, as well as display the run chart, log alarm events, or group DL-110-E / DL-120-E modules so that the status of distribution groups can be viewed and managed. The utility also allows the log data to be downloaded and exported to a .CSV file that can then be imported into any industry-standard software or spreadsheet for analysis.

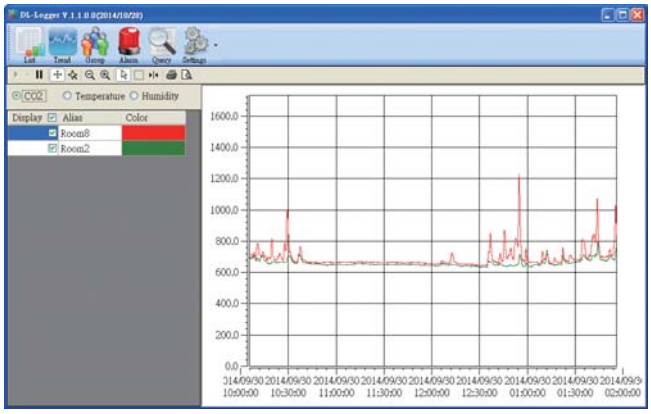

## Specifications

| Model | | DL-110-E | DL-110-E-W | DL-120-E | DL-120-E-W |
|---|---|---|---|---|---|
| **Illuminance Measurement** | | | | | |
| Range | | 0 to 100,000 Lux | | | |
| Resolution | | 1 Lux | | | |
| Accuracy | | ±5% | | | |
| **Temperature Measurement** | | | | | |
| Range | | -20 to +60°C (-31 to +176˚F) | | - | |
| Resolution | | 0.1°C | | - | |
| Accuracy | | Typical: ±0.4°C | | - | |
| **Relative Humidity Measurement** | | | | | |
| Range | | 0 to 100% RH | | - | |
| Resolution | | 0.1% RH | | - | |
| Accuracy | | Typical: ±3% RH @ 20 ~ 80% RH | | - | |
| **LED Indicators** | | | | | |
| PWR | | System indicator (Green) | | | |
| Link | | Link/Act indicator (Green) | | | |
| PoE | | PoE indicator (Red) | | | |
| **Software** | | | | | |
| Built-in Web Server | | Yes | | | |
| **Communication** | | | | | |
| Ethernet Port | | 10/100 Base-TX, 8-Pin RJ-45 x1 (Auto-negotiating, | | | |
| Security | | IP filter (whitelist) and Password (web) | | | |
| Protocol | | Modbus TCP and MQTT(Ethernet) | | | |
| Dual Watchdog | | Yes, Module (2.3 seconds), Communication | | | |
| **System** | | | | | |
| Real Time Clock | | Yes | | | |
| Data Logger | | Yes, 600,000 Records | | | |
| **Electrical** | | | | | |
| Powered via Terminal Block | | +12 to +48 VDC | | | |
| Powered via PoE | | IEEE 802.3af, Class 1 (require a PoE switch or injector) | | | |
| Power Consumption | PoE | 1.2 W (Max.) | | | |
| | Non-PoE | 1.1 W (Max.) | | | |
| **Mechanical** | | | | | |
| Dimensions (W x L x H) | | 100 mm x 131 mm x 67 mm | | 100 mm x 112 mm x 67 mm | |
| Waterproof Level | | IP65 | | | |
| Installation | | DIN-Rail or Wall mounted | | | |
| Module Housing | | Black Cover | White Cover | Black Cover | White Cover |
| **Environment** | | | | | |
| Operating Temperature | | -20 to +60°C | | | |
| Storage Temperature | | -30 to +80°C | | | |
| Humidity | | 10 to 95% RH, Non-condensing | | | |

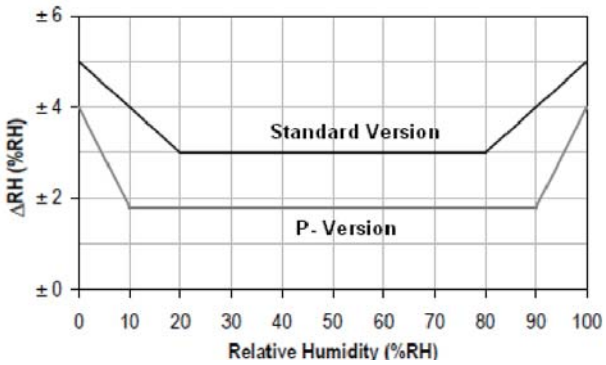


Maximum RH-tolerance at 25° C per sensor.

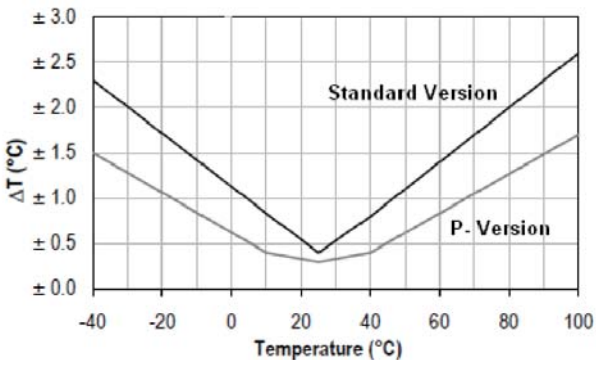


Maximum T-tolerance per sensor.

## Dimensions (Units: mm)

### DL-110-E/DL-110-E-W

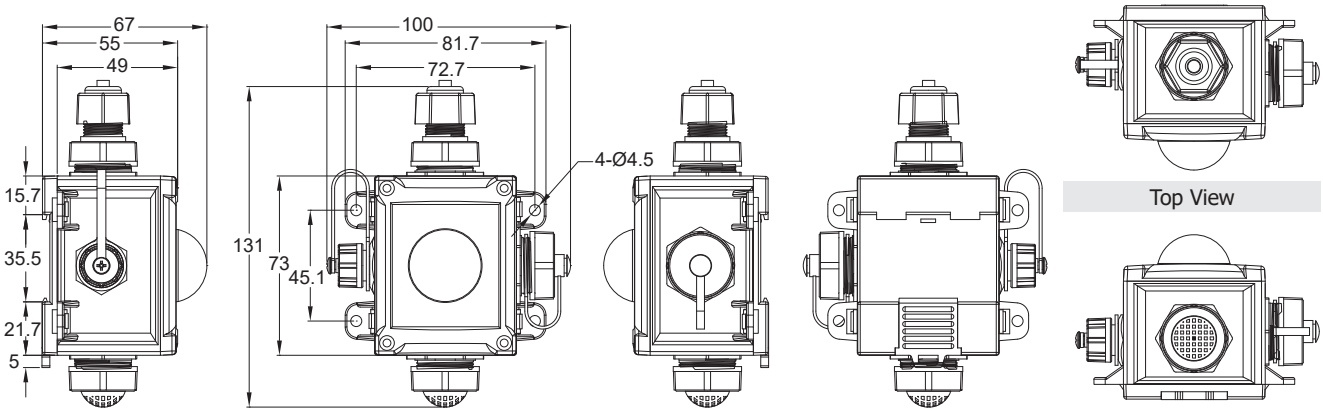


Left View | Front View | Right View | Rear View | Top View | Bottom View

### DL-120-E/DL-120-E-W

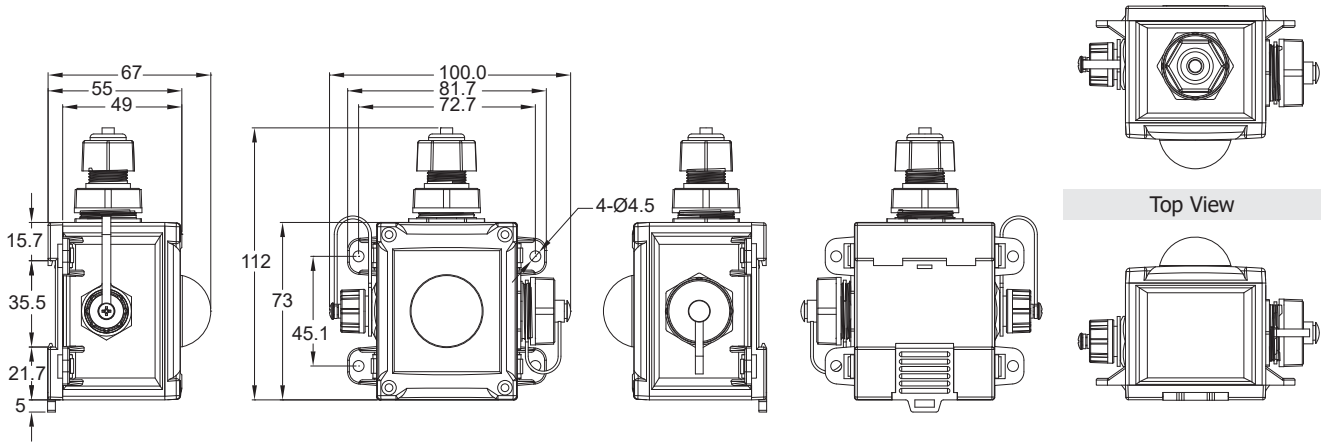


Left View | Front View | Right View | Rear View | Top View | Bottom View

## Appearance

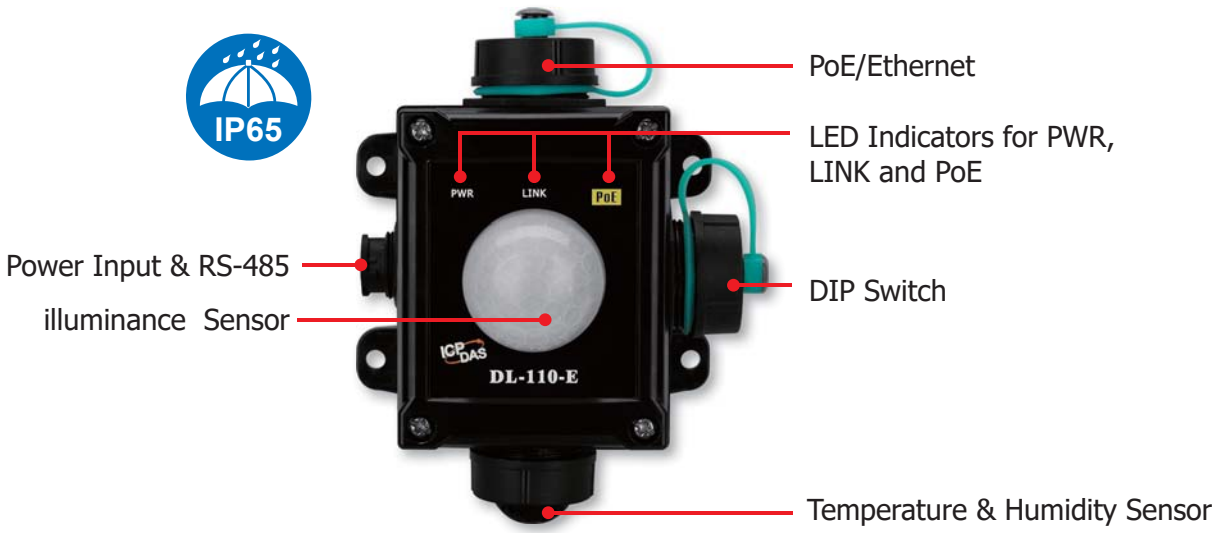

## Applications

### Greenhouse Automation Cloud Management Solution

The greenhouse automation system can use the DL series to provide environmental monitoring such as illuminance (DL-110-E / DL-120-E), temperature and humidity (DL-300/DL-100 series), etc., to make plants grow well, increase crop yield, improve quality, provide product traceability record, and control of sunshine and sprinkler systems. Install WISE-523xM-4GE IIoT smart host with iCAM series network camera can carry out greenhouse monitoring and management, provide further personnel access and thief intrusion monitoring. When fi nds someone intrusion, it will automatically send SMS, LINE/WeChat to the owner, security and related personnel, to quickly protect property and safety. WISE supports cloud management software IoTstar, so owners can easily build cloud management system solutions and keep with the latest situation in the greenhouse.

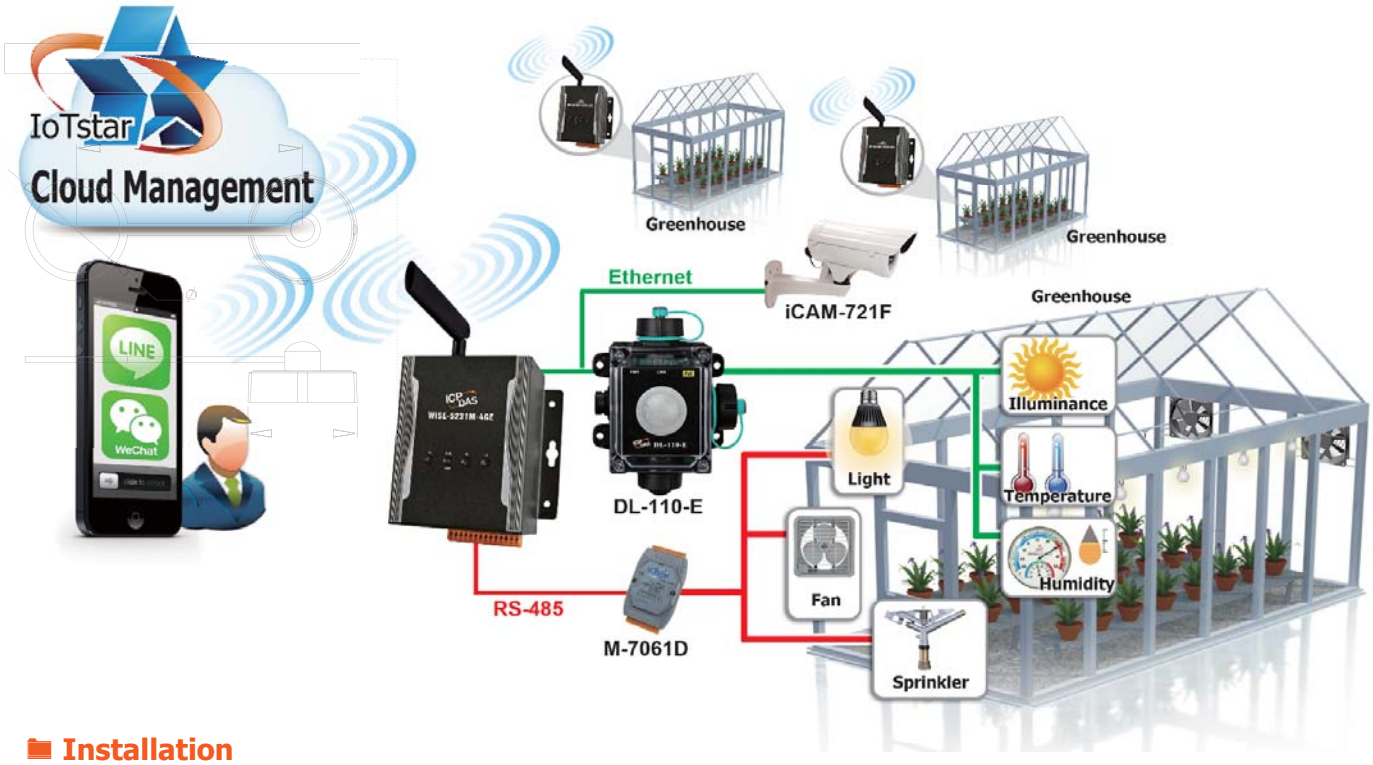


## Installation

**DIN-Rail**

**Wall mounted**

## Ordering Information

| | |
|---|---|
| **DL-110-E CR** | Remote Illuminance/Temperature/Humidity/Dew Point Data Logger Module with Ethernet/RS-485 Inter face and PoE (Black Cover) (RoHS) |
| **DL-110-E-W CR** | DL-110-E with White Cover (RoHS) |
| **DL-120-E CR** | Remote Illuminance Data Logger Module with Ethernet/RS-485 Inter face and PoE (Black Cover) (RoHS) |
| **DL-120-E-W CR** | DL-120-E with White Cover (RoHS) |

## Accessories

| **Model** | **NS-205-IP67** | **NS-205PSE-IP67** | **NS-208PSE-IP67** | **NS-208-IP67** |
|---|---|---|---|---|
| | | | | |
| PoE | – | 802.3af x 4 | 802.3af x 8 | – |
| Input Voltage Range | +10 VDC ~ +30 VDC (1 kV Isolated) | +46 VDC ~ +53 VDC | | +12 VDC ~ +53 VDC |
| Installation | Wall Mounted | Wall Mounted | Wall Mounted | |
| Dimensions (W x L x H) (Units: mm) | 85 x 76 x 137 | 85 x 76 x 137 | 190 x 155 x 104 | |

| | |
|---|---|
| MDR-60-48 | 48 V/1.25 A, 60 W Power Supply with DIN-Rail Mounting |
| DIN-KA52F-48 | 48 V/0.52 A, 25 W Power Supply with DIN-Rail Mounting |
| DR-120-48 | 48 V/2.5 A,120 W Power Supply with DIN-Rail Mounting |

| IP67 RJ-45 Plug | Cap with Tether | IP67 Power Plug |
|---|---|---|
| | | |
| 4SASO-0001 | 4SASO-0004 | 4SIOIK0000013 |