WIO500 and WIOI500
Water in oil sensor

User manual Rev. 1.08

111881-942 Rev. 1.08 User manual 500

Date: 2017-01-20

PAJ Sensor A/S • Grundtvigs Allé 163 • DK-6400 Sønderborg
Tel: +45 74 43 71 81 • Fax: +45 74 43 71 91 • CVR: 3459-1229 • www.paj-sensor.com • e-mail: paj@paj.dk
APPROVALS: ISO 9001, ISO 14001, ISO 13485, IEC 61340-51 & IPC-A-610 CLASS 3

Table of contents

Table of contents 2
Introduction 3
Safety Advice 4
Function 6
Normal operation 7
Failure indication 8
Self test for alarm functions 9
Before installation 11
WIO Sensor dimensions in mm 15
Terminal box dimensions in mm 17
WIO Integrated (WIOI) dimensions in mm 18
Technical data, Sensors 20
Technical Data Terminal Box 23
Technical Data Terminal Display Box 25
Technical Data Terminal Box Alarm 28
Technical Data Terminal Box Alarm Buzzer 31
Technical Data Terminal Box Alarm Buzzer 35
Technical data, WIOI (WIO Integrated) 40
Description of CANopen protocol functionality 46
Object dictionary for module: 46
Communication for reading Index 0x2000 subindex 1 (HA relay status), from node ID 1 49
Communication for writing value “80” to Index 0x2001 subindex 2 (HHA alarm level), to node ID 2 49
Communication examples for function code 01 51
Communication examples for function code 03 51
Communication examples for function code 04 52
Communication examples for function code 05 52
Communication examples for function code 06 52
Communication examples for function code 10 53
CRC Calculation 53
Error codes 53
Table for aW to HEX value 54
WIO-Software 54
CANbus Guidelines 55
EC-Declaration of Conformity 56
Appendix A1: Install 1 Terminal Box with 1 display 59
Appendix A2: Install 1 Terminal Box with no display 60
Appendix A3: Install 2 Terminal Boxes with 3 display 61
Appendix A4: Install 2 Terminal Boxes with 1 display 62
Appendix A5: Install 2 Terminal Boxes with 2 display 63
Appendix A6: Install 3 Terminal Boxes with 4 display 64
Appendix A7: Install 3 Terminal Boxes with 3 display 65
Appendix A8: Install 3 Terminal Boxes with 2 display 66
Appendix A9: CABLE Specification 67
How to adjust the display in a WIO/WIOI 68
Appendix A10: Error / failure FAQ 76
Company Information 79

Introduction

This user manual provides technical data regarding the WIO (water in lubrication oil, gear box oil, diesel oil, hydraulic oil or transformer oil) sensor system. The system consist of a WIO Sensor, terminal box and cables. The WIO Sensor is an insitu sensor which measures water content in lubrication oils on ship engine or similar. The Terminal box connects the sensor to power supply and to the ships surveillance system. The supplied cables are for connection between the WIO Sensor and the Terminal box

Safety Advice

For your safety

The *WIO500* (WIO) is designed as water in oil monitoring system, with a relay switch-off function and CanOpen communication based on Modbus protocol.

Before use please read the user manual and carefully store it in a safe place. Install and operate the device only after reading and comprehending the instruction manual, and after you are familiar with the valid rules on work safety and accident prevention.

Please use the device only as specified. For this purpose please also note the values in section "Technical data".

During transport, storage and operation please adhere to the conditions listed in "Technical data".

IMPORTANT

Only qualified personnel may assemble start-up and maintain the unit when it is in a zero voltage state. Only qualified electricians may work on electrical installations.

The connection and instruction manual contains information that enables the proper and efficient use of the WIO monitoring system. PAJ Sensors A/S is not liable for damage caused be improper use of this device. This manual is an integral part of the basic knowledge necessary for proper use of the system.

Rights

PAJ Sensors A/S reserves the right to alter its products without prior notice.

Copying and using the instruction manual for other purposes is only allowed with the acceptance from PAJ Sensors A/S.

PAJ Sensors A/S accepts no responsibility for possible errors and deficiencies in brochures, catalogues and other printed material.

PAJ Sensors A/S guarantees correct function as well as fulfillment of the safety requirements only when connections are made in accordance with instructions.

Safety observations

The comments about safety in this document will not discuss safety observations of individual machine parts where safety devices (usually safety relays) are applied. Here the respective instruction manuals will be referenced! This document merely describes how to establish a WIO and how to start it up.

WARNING

The monitoring system during machine operation cannot be guaranteed if the system is connected incorrectly or not used as specified. This may lead to fatal injuries. Interventions and changes to the WIO monitoring system are not permitted, unless they are explicitly described in this user manual or be written from PAJ Sensors A/S.

The regional legal regulations and conditions of the liability insurance of the employer must be maintained.

Area of application

The WIO monitoring system is usually used in engines were a WIO will monitor the water content in lubrication oil, gear box oil, diesel oil, hydraulic oil or transformer oil.

The advantage of this monitoring system is the simple 4-20 mA interface and the two relays indicating alarms, with digital readout.

Normally the WIO sensor is calibrated in Taro30 lubrication oil, if nothing else are defined from customer.

Function

Short description of the function

PAJ Sensors A/S has developed a water in oil (WIO) monitoring system. The fundamental idea of the WIO system is to easily and continuously monitor the water activity (a_w) in oil. The output is converted into a standard 4-20 mA output.

The system also includes two relays indicating when too much water is present in the oil. Default alarm values are set to 0,5 a_w (high alarm) and 0,9 a_w (high high alarm)

By use of the WIO-Software it is possible to change HHA and HA levels. Furthermore you can continuously read out and graph the a_w (or PPM) of water in the oil.

WARNING

Do not use the sensor or relays to automatically enable/turn on or disable/shut down engine. The decision to enable/turn on or disable/shut down an engine, based on the sensor data, must be taken by proper trained crew personnel, not by the sensor system.

Normal operation

Water activity (a_w) provides the relative availability of water in oil where pure oil has an activity of zero and oil saturated with distilled water has an activity of exactly one. Under normal operation the WIO500 continuously supplies an output analogue signal of 4 to 20 mA corresponding to 0.01 to 1.00 a_w. Alarm indications with 0.03 a_w hysteresis via 2 relays are provided for each sensor. These data can also be read out from the sensor on the CANopen communication line.

Default alarm values are 0,5 a_w and 0,9 a_w. Assumes these alarm values:

High alarm on at 0,50 a_w (12 mA).
High alarm off at 0,47 a_w (11,5 mA)
High high alarm on at 0,90 a_w (18,4 mA).
High high alarm off at 0,87 a_w (17,9 mA).
High high alarm will disable high alarm, thus only one alarm can be active.

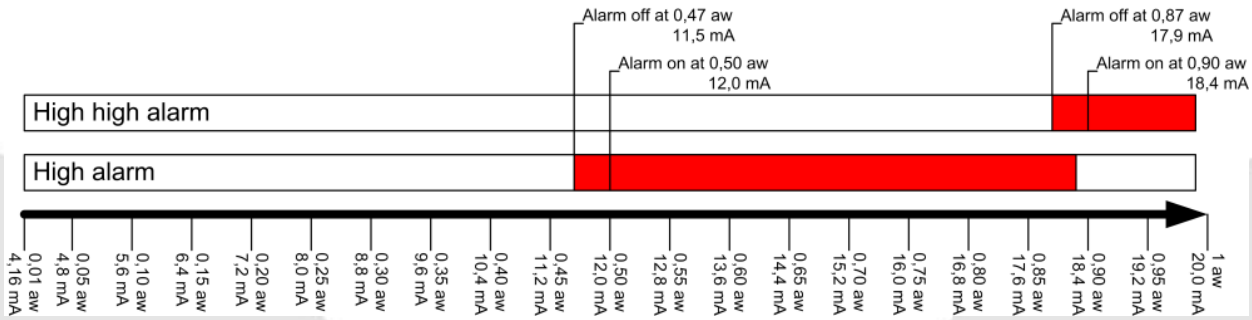

Failure indication

Internal function failure will be indicated by activating both alarm relays at the same time, or indicated as defined in the NAMUR NE43.

Internal failures includes:

- Sensor reading out of range.
- Sensor reading CRC error.
- Unstable Sensor reading.

NAMUR NE43 is a German fault detection standard for 4-20mA analogue signals. It allows the user to know if there is a fault within the instrument, by sending analogue signal below 4mA and/or above 20mA. In accordance with NAMUR NE43, the failure is indicated by:

- Fault indicated by analogue output =<2,0 mA

Self test for alarm functions

On the WIO Sensor there is a button for testing the alarm functions. By pushing the Test button for 5 sec the high alarm relay turns on, and by pushing the Test button for 10 sec the high alarm relay turns off and the high high alarm turns on. When the Test button has been pushed continuously for more than 15 sec, it will be ignored by the software, and the relays return to normal operation.

Test Button	***Mode***	***Output Relay***	***Analogue Output***
Un-pressed	Normal operation and ***no alarm***	Relay 1 Open Relay 2 Open	Normal
Pressed longer than **5 sec**	Test of high alarm	Relay 1 Closed Relay 2 Open	Normal
Pressed longer than **10 sec**	Test of high high alarm	Relay 1 Open Relay 2 Closed	Normal
Pressed longer than **15 sec**	Normal operation	Normal	Normal

Test Button	Mode	Output Relay	Analogue Output
Un-pressed	Normal operation, with ***high alarm active***	Relay 1 Closed Relay 2 Open	Normal
Pressed longer than **5 sec**	Test of high alarm	Relay 1 Closed Relay 2 Open	Normal
Pressed longer than **10 sec**	Test of high high alarm	Relay 1 Open Relay 2 Closed	Normal
Pressed longer than 15 **sec**	Normal operation	Normal	Normal

Before installation

IMPORTANT

Only qualified personnel may assemble and maintain the unit. Only qualified personnel may install the unit.

Screw in probe pressure-tight directly in the center of the oil pipe where the measurement is to take place. The threads should be sealed with Loctite® 271. The sensor should be mounted with max. torque of 35 Nm. Connect the cables from the WIO sensor to the Terminal box. Use a hexagon wrench size 30.

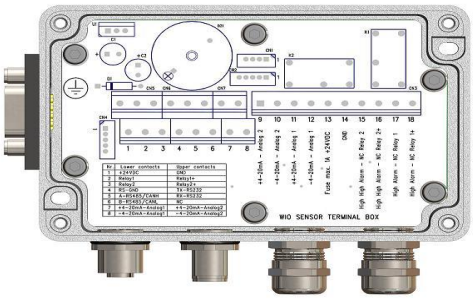

To sensor Power and Alarms

IMPORTANT

Only qualified personnel may assemble start-up and maintain the terminal box(s) when it is in a zero voltage state. Only qualified electricians may work on electrical installations.

Install +24 VDC and GND into the terminal box and connect the 4-20 mA to an external device if needed. Connect the relay to external device if needed.

If the terminal box has a (a_w) or PPM display, there must be a short circuit between terminals 11 and 12. This short circuit produces the needed closed loop for mA measurement.

If the terminal box has a °C or °F display, there must be a short circuit between terminals 9 and 10. This short circuit produces the needed closed loop for mA measurement.

After installing the WIO-Software can PC and terminal box be connected through DB9 connector.

Last connect the cables from the Terminal box to the sensor.

It is allowed (but not necessary) to connect screw terminal 10 and 12 "-4-20 mA" to screw terminal 14 "GND", thus creating common ground for the output and the power.

Terminal boxes with display. Screw terminal pin 11 and 12 or screw terminal pin 9 and 10 can be connected to external equipment, but only in a closed loop for mA measurement.

Terminal Box Connection

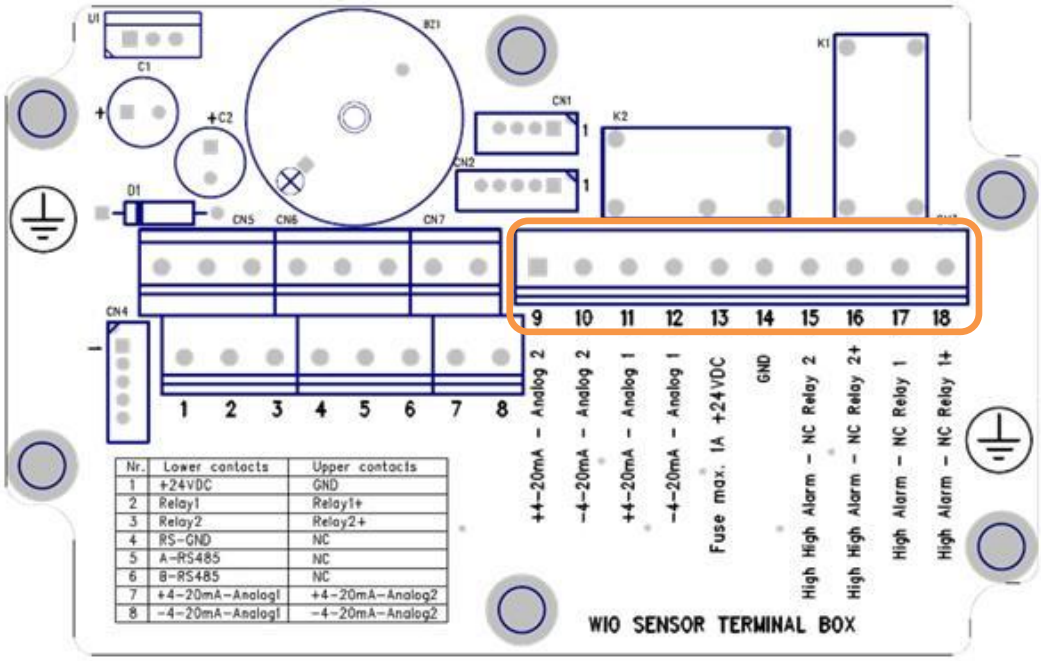

Nr.	Lower contacts	Upper contacts
1	+24VDC	GND
2	Relay1	Relay1+
3	Relay2	Relay2+
4	RS-GND	NC
5	A-RS485	NC
6	B-RS485	NC
7	+4-20mA-Analog1	+4-20mA-Analog2
8	-4-20mA-Analog1	-4-20mA-Analog2

Contact Assignment

There is only one connector CN3 for using of the terminal box contacts.

Contact-Number	Description
9	+4 – 20 mA positive analog output signal for indication of temperature in oil. This option is not available for WIO200
10	-4 – 20 mA return analog signal for indication of temperature in oil. This option is not available for WIO200
11	+4 – 20 mA positive analog output signal for indication of a_w or PPM in oil.
12	-4 – 20 mA return analog signal for indication of a_w or PPM in oil.
13	Power supply, 24VDC ±10% and with max. residual voltage ripple 10%
14	Power supply ground terminal contact
15	Relay contact for HH Alarm
16	Relay contact for HH Alarm
17	Relay contact for H Alarm
18	Relay contact for H Alarm

For connection more than one terminal box please refer to:

- Appendix A1
- Appendix A2
- Appendix A3

Pin assignment of D-Sub9 connector

Communication

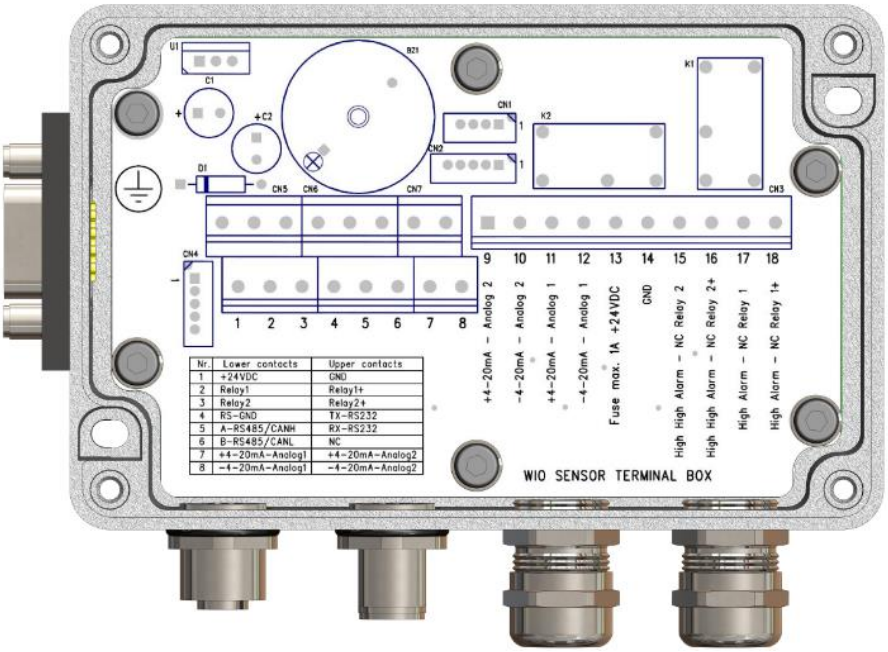

To sensor Power and Alarms

DB9 connector pin layout			
Illustration	Assignment		
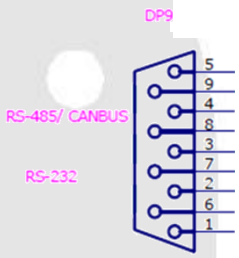	1	NC	-
	2	NC	-
	3	NC	-
	4	NC	-
	5	Black	RS-GND
	6	NC	-
	7	Blue	CAN L
	8	NC	-
	9	White	CAN H

WIO Sensor dimensions in mm

WIO Standard ½" thread Sensor, Short dimensions in mm:

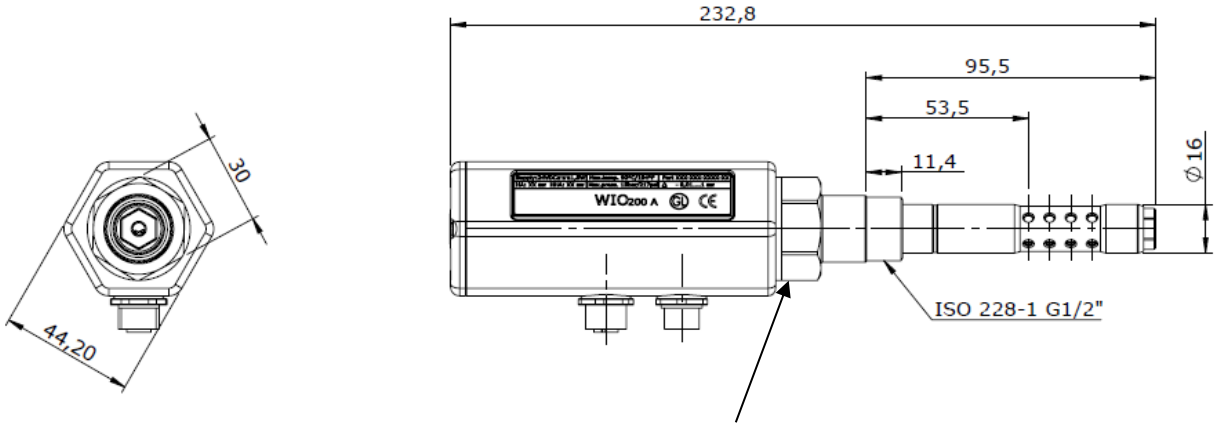

30mm Wrench max. torque 35 Nm

WIO Standard ¾" thread Sensor, Short dimensions in mm:

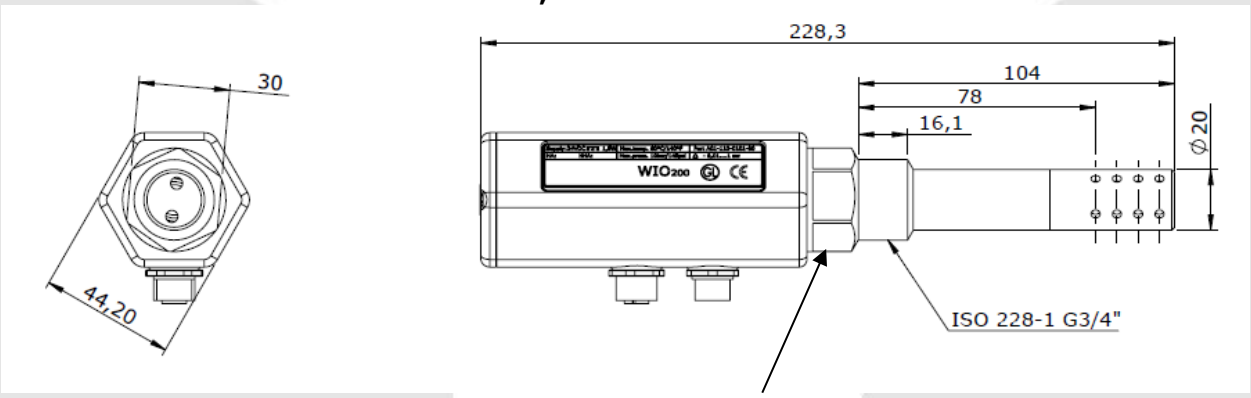

30mm Wrench max. torque 35 Nm

WIO Ball Valve pipe ½" thread Sensor, Long dimensions in mm:

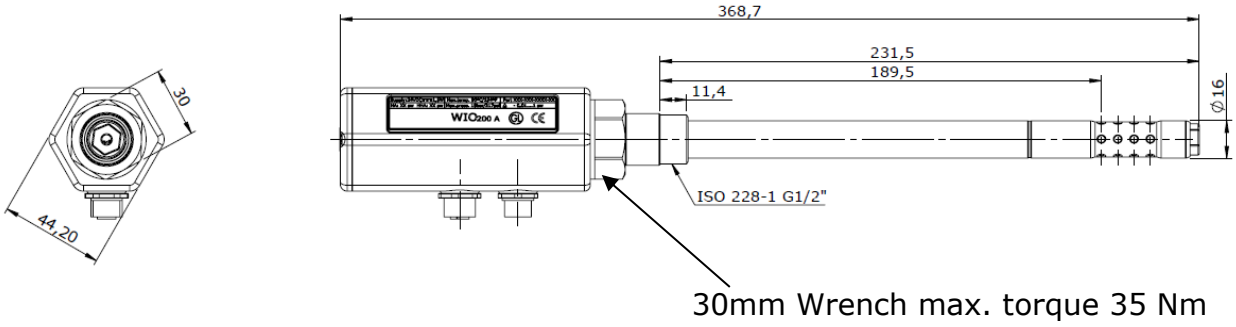

WIO Ball Valve pipe ¾" thread Sensor, Long dimensions in mm:

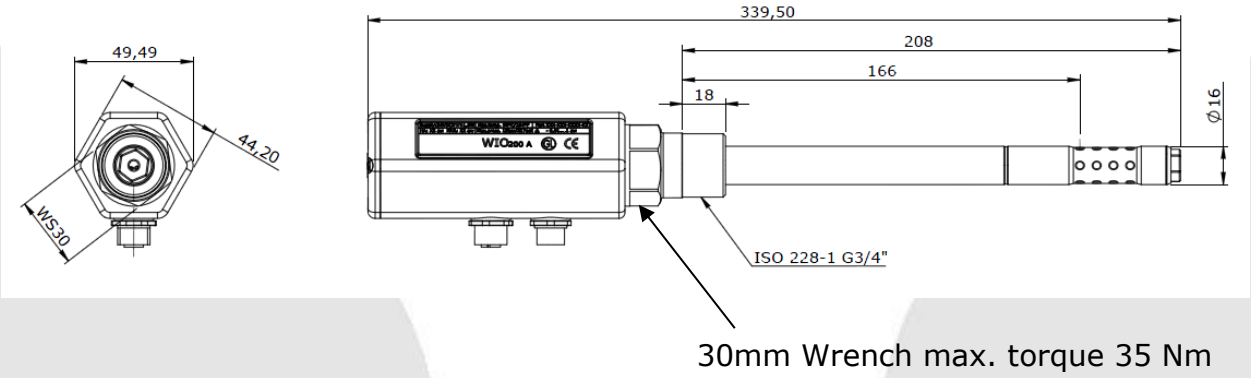

Terminal box dimensions in mm

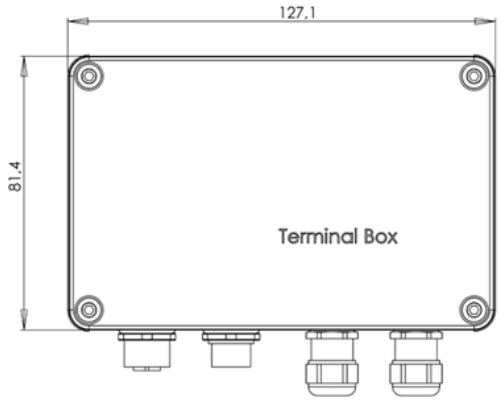

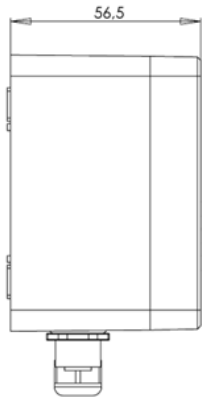

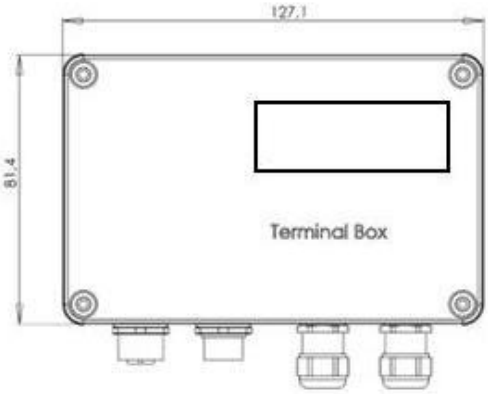

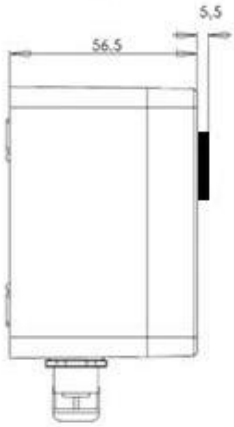

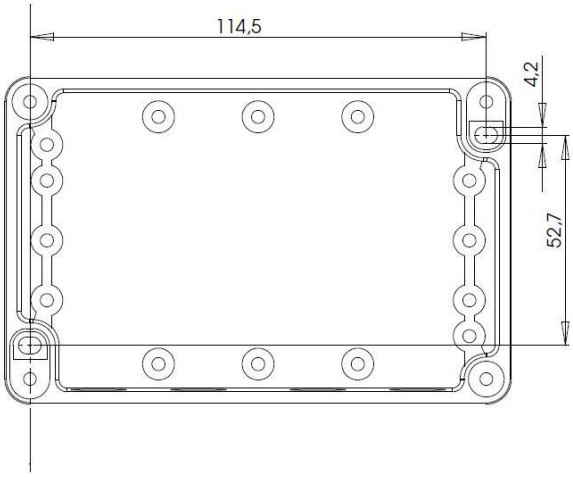

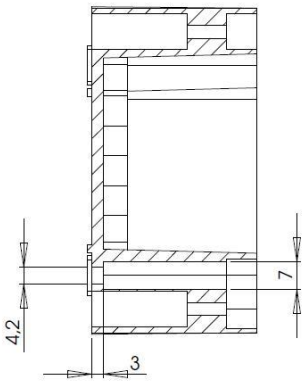

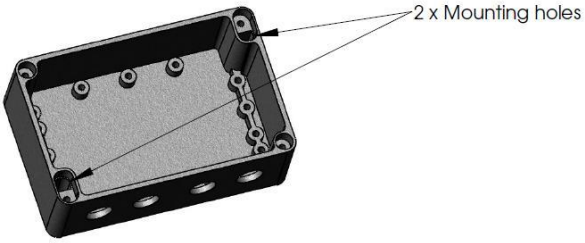

WIO Integrated (WIOI) dimensions in mm

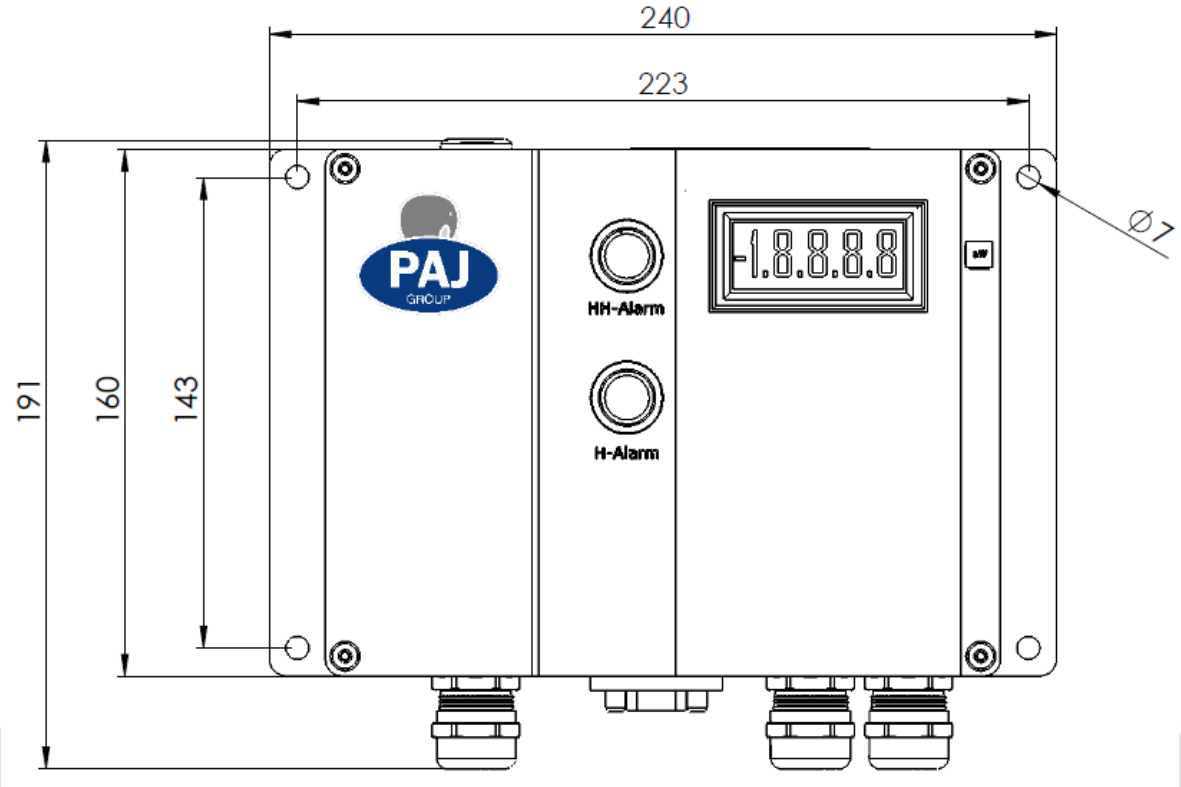

WIOI Sensor, short pipe, ½" thread, dimensions in mm:

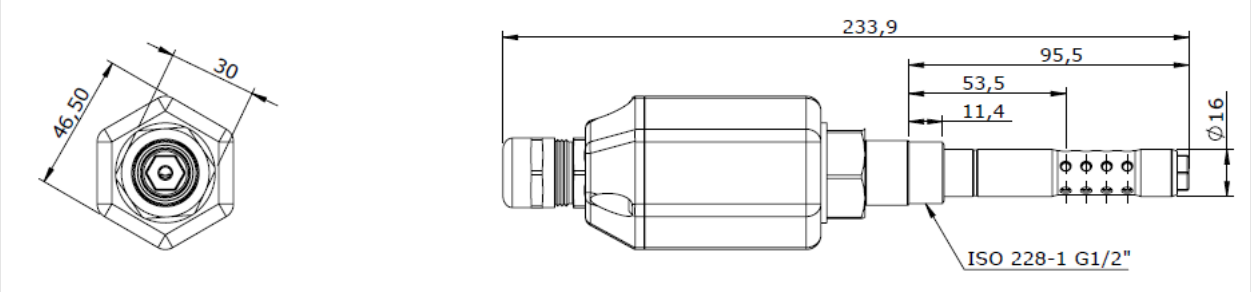

WIOI Sensor, long pipe, ½" thread, dimensions in mm:

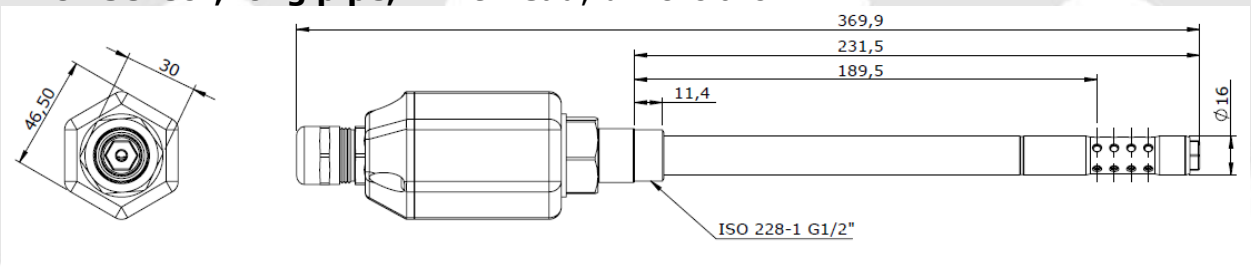

WIOI Sensor, long pipe, ¾" thread, dimensions in mm:

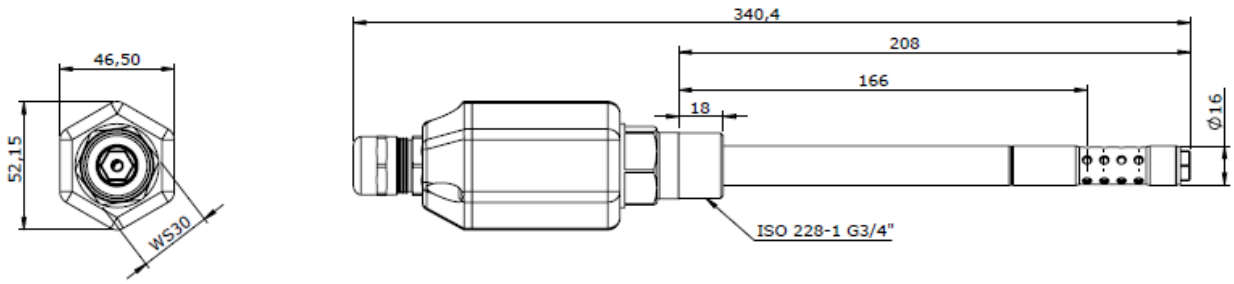

Technical data, Sensors

WIO Standard ¾” (ISO 228-1 G¾”), Short

WIO Standard ½” (ISO 228-1 G½”), Short

WIO Ball Valve pipe, Long

Output	
Analogue output (galvanic isolated)	4 – 20 mA for a_w
Analogue output (galvanic isolated)	4 – 20 mA for temperature (0°C – 100°C)
Max. Load (analogue output)	< 500Ω
Measurement Range (4 – 20 mA)	0,01 – 1,00 a_w
Accuracy (0,05-0,95 a_w)	± 0,03 a_w
Accuracy (outside 0,05-0,95 a_w)	± 0,05 a_w
Resolution	< 0,004 a_w
Digital output	Communication CANopen
Communication Protocol	Modbus RTU
Input	
Supply nominal voltage	24V DC ± 10%
Max. residual voltage ripple	10%
Maximum Load current	200 mA
Max. Power input	< 4,8 VA

Relays	
Contact arrangement	2 x Normally Closed (NC)
Rated voltage	60V
Rated current (40°C)	1A
Max. DC Load breaking capacity	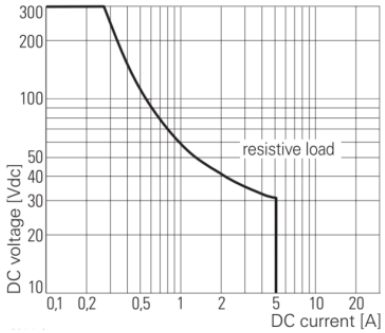
Relay 1	*„High Alarm"*
Relay 2	*„High High Alarm"*
Default High Alarm	0,50 a_w
Default High High Alarm	0,90 a_w

Socket specification	
Connector design	1x male socket, 1x female socket
Connector locking system	Screw-locking, M12x1
Wire gauge	0,25 mm^2
Contacts	8 Pol
Rated voltage	60V
Rated current (40°C)	1A
Cable specification	
Cable design	Multipair overall screened cable
Outlet diameter	9,9 mm
Voltage class	0,6/1kV
Wires	4x2 twisted pair
Wire gauge	0,75 mm^2
Media for measurement	
Lubrication oil	Grade SAE 30/TBN 5-10
Max. Oil temperature	90°C
Max. Oil pressure	Sensor mounting method in application: Ball valve mounted: Max. 10 Bar Thread mounted: Max. 20 Bar

Response times	
Delay before valid data from start-up	< 30 s
Delay before valid data from installation (first use)	10 minutes
Device Failure Indication	
Analogue output	< 2 mA
Manual test	
Press sensor test button for 5 seconds	High Alarm turns on for 5 seconds
Press sensor test button for 10 seconds	High Alarm turns off High High Alarm turns on for 5 seconds
Press sensor test button for 15 seconds	Normal operating and test button ignored
Miscellaneous	
Ambient Temperature, running / storage	0 - 90°C / -30 - +95°C
Relative humidity for running and storage	10% up to 95%, no condensation
Re calibration	Recommended with max 3 years interval
Warranty	2 years
Approvals	
Germanischer Loyd	WIO products are EU approval under 75 965 – 09 HH date 2009-11-30
Enclosure	
Weight for WIO standard	650 grams
Weight for WIO Ball valve pipe	790 grams
Connection (mechanical)	ISO 228-1 G ½" or ¾" thread 2 x 8-pole connectors, male and female, M12x1 thread
Enclosure material	Stainless Steel/Aluminum EN44100 (Former 4261)
Protective type	IP66

Technical Data Terminal Box

Output	
Analogue output	See the specifications for sensor's analogue output
Digital output	See the specifications for sensor's digital output
Input	
Supply nominal voltage	24V DC ± 10%
Max. residual voltage ripple	10%
Maximum Load current	200 mA
Max. Power input	< 4,8 VA
Relays	
Contact arrangement	2 x Normally Open (NO)
Rated voltage	250 VAC
Max. switching voltage	400VAC
Rated current	2A
Breaking capacity max.	1250VA
Enclosure	
Weight	650 grams
Connection to sensor (mechanical)	2 x 8-pole connectors, male and female, M12x1 thread
Connection (mechanical)	2 x M20 gland, cable diameter 6 to 12 mm 1 x D-sub9, male
Enclosure material	Aluminum
Protective type	IP66
Warranty	2 years

FUNCTIONING

Terminal box shall be provided with 24vdc.
Terminal box supply 24vdc on to WIO sensor.
WIO sensor delivers mA, digital values and relay status to the terminal box.

Technical Data Terminal Display Box

Output	
Analogue output	See the specifications for sensor's analogue output
Digital output	See the specifications for sensor's digital output
Input	
Supply nominal voltage	24V DC ± 10%
Max. residual voltage ripple	10%
Maximum Load current	200 mA
Max. Power input	< 4,8 VA
Relays	
Contact arrangement	2 x Normally Open (NO)
Rated voltage	250 VAC
Max. switching voltage	400VAC
Rated current	2A
Breaking capacity max.	1250VA
Display version - a_w (water activity from 0,01 to 1,00**)**	
Accuracy (0,05-0,95 a_w)	± 0,03 a_w
Resolution	<0,004 a_w
Display version - PPM (H_20)	
Accuracy (0,05-0,95 a_w)	±30%
Resolution	1 PPM
Enclosure	
Weight	650 grams
Connection to sensor (mechanical)	2 x 8-pole connectors, male and female, M12x1 thread
Connection (mechanical)	2 x M20 gland, cable diameter 6 to 12 mm 1 x D-sub9, male
Enclosure material	Aluminum
Protective type	IP66
Warranty	2 years

FUNCTIONING

Terminal box shall be provided with 24vdc.
Terminal box supply 24vdc on to WIO sensor.
Terminal box measuring mA from the sensor, and convert it to a_w or PPM value.
WIO sensor delivers mA, digital value and relay status to the terminal box.

IMPORTANT

The display is an indication of the water level in the oil. Display can be shipped as PPM or a_w.

Upon ordering a PPM display the customer must specify the water saturation point in PPM of the used oil at the preferred working temperature of the oil. The saturation point is typically between 3000-10000 PPM. Alternatively the customer can ship 10 liters of oil to PAJ Sensor A/S for inspection including specification of the working oil temperature.

WARNING

All displays will show from positive values when operating properly. There will appear a negative value during start-up, after 5 seconds the value will be in positive measurement range. Otherwise, if a negative value is present the Terminal box might have been installed incorrectly.

NOTE

WIO500 uses 3 different units for the measurement of water in oil:

1) **a_w**: WIO measures humidity in **a_w**. The range is 0.01…1.00 a_w.
2) **%RH** (relative humidity) is identical to the unit a_w multiplied by 100. The range is 1…100 %RH
3) **ppm**: WIO can convert **a_w** to **ppm**. In this case the saturation point, at a given temperature, must be known. Output in ppm is only reliable at this temperature.

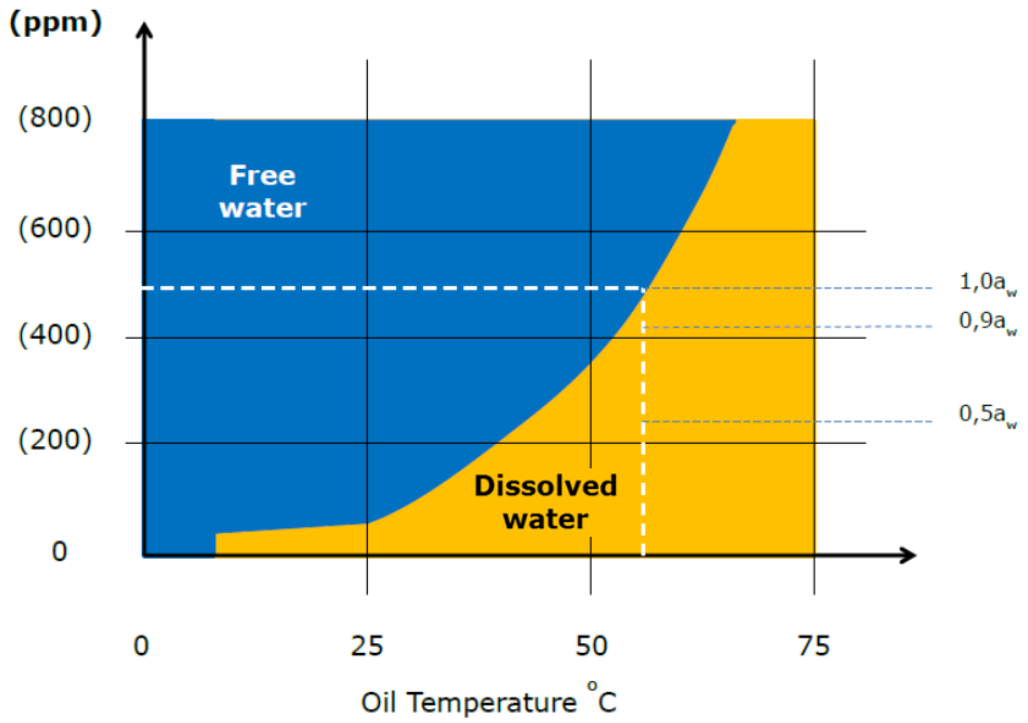

Technical Data Terminal Box Alarm

Output	
Analogue output	See the specifications for sensor's analogue output
Digital output	See the specifications for sensor's digital output
Input	
Supply nominal voltage	24V DC ± 10%
Max. residual voltage ripple	10%
Maximum Load current	200 mA
Max. Power input	< 4,8 VA
Relays	
Contact arrangement	2 x Normally Open (NO)
Rated voltage	250 VAC
Max. switching voltage	400VAC
Rated current	2A
Breaking capacity max.	1250VA
Buzzer	
Oscillation frequency	3000±500 Hz
Sound pressure level	85db by open housing
Tone	pulsed
Button with LED	
Blink frequency	2 Hz
Color	RED
Enclosure	
Weight	530 grams
Connection to sensor (mechanical)	2 x 8-pole connectors, male and female, M12x1 thread
Connection (mechanical)	2 x M20 gland, cable diameter 6 to 12 mm 1 x D-sub9, male
Enclosure material	Aluminum
Protective type	IP66
Warranty	2 years

FUNCTIONING

Terminal box shall be provided with 24vdc.
Terminal box supply 24vdc on to WIO sensor.
Terminal box indicate the relay status from the WIO sensor.
WIO sensor delivers mA, digtal values and relay status to the terminal box.

H-Alarm LED is for indication of the High Alarm relay state from the WIO sensor. When the alarm condition is generated by the WIO sensor, then the High Alarm relay is open and the H-Alarm LED flash red ON/OFF sequence to show the High Alarm state, and the alarm signal buzzer will be switched ON.

HH-Alarm LED is for indication of the High High Alarm relay state from the WIO sensor. When the alarm condition is generated by the WIO sensor, then the High High Alarm relay is open and the HH-Alarm LED flash red ON/OFF sequence to show the High High Alarm state, and the alarm signal buzzer will be switched ON.

The H-Alarm LED or HH-Alarm LED will stay in blinking mode until the H-Alarm or HH-Alarm button is pressed, then the LED constantly turned on. The alarm signal buzzer will stay on until the H-Alarm or HH-Alarm button is pressed.

Abstract representation of the H-Alarm and HH-Alarm button and LED function:

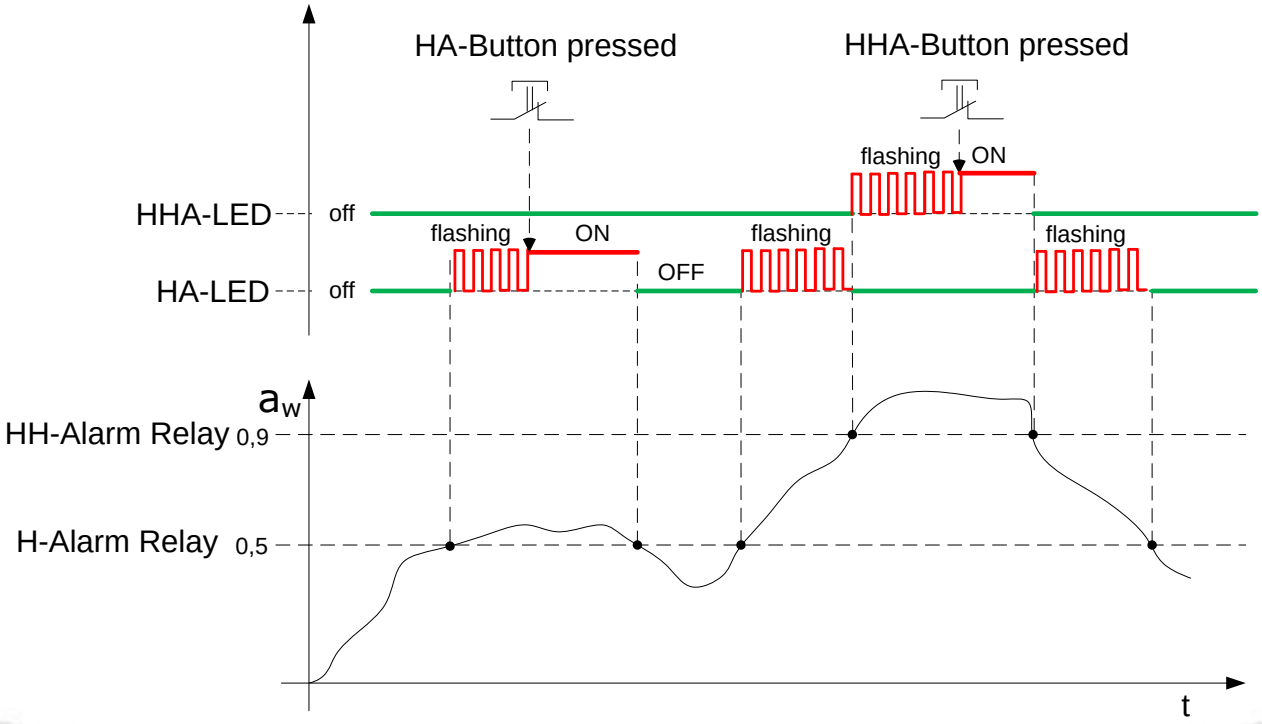

Figure 1: H-Alarm and HH-Alarm button function

Technical Data Terminal Box Alarm Buzzer

Output	
Analogue output	See the specifications for sensor's analogue output
Digital output	See the specifications for sensor's digital output
Input	
Supply nominal voltage	24V DC ± 10%
Max. residual voltage ripple	10%
Maximum Load current	200 mA
Max. Power input	< 4,8 VA
Relays	
Contact arrangement	2 x Normally Open (NO)
Rated voltage	250 VAC
Max. switching voltage	400VAC
Rated current	2A
Breaking capacity max.	1250VA
Display version - a_w (water activity from 0,01 to 1,00**)**	
Accuracy (0,05-0,95 a_w)	± 0,03 a_w
Resolution	<0,004 a_w
Display version - PPM (H_20)	
Accuracy (0,05-0,95 a_w)	±30%
Resolution	1 PPM
Buzzer	
Oscillation frequency	3000±500 Hz
Sound pressure level	85db by open housing
Tone	pulsed

Button with LED	
Blink frequency	2 Hz
Color	RED
Enclosure	
Weight	650 grams
Connection to sensor (mechanical)	2 x 8-pole connectors, male and female, M12x1 thread
Connection (mechanical)	2 x M20 gland, cable diameter 6 to 12 mm 1 x D-sub9, male
Enclosure material	Aluminum
Protective type	IP66
Warranty	2 years

FUNCTIONING

Terminal box shall be provided with 24vdc.
Terminal box supply 24vdc on to WIO sensor.
Terminal box measuring mA from the sensor, and convert it to a_w or PPM value.
WIO sensor delivers mA, digital values and relay status to the terminal box.

H-Alarm LED is for indication of the High Alarm relay state from the WIO sensor. When the alarm condition is generated by the WIO sensor, then the High Alarm relay is open and the H-Alarm LED flash red ON/OFF sequence to show the High Alarm state, and the alarm signal buzzer will be switched ON.

HH-Alarm LED is for indication of the High High Alarm relay state from the WIO sensor. When the alarm condition is generated by the WIO sensor, then the High High Alarm relay is open and the HH-Alarm LED flash red ON/OFF sequence to show the High High Alarm state, and the alarm signal buzzer will be switched ON.

The H-Alarm LED or HH-Alarm LED will stay in blinking mode until the H-Alarm or HH-Alarm button is pressed, then the LED constantly turned on. The alarm signal buzzer will stay on until the H-Alarm or HH-Alarm button is pressed.

Abstract representation of the H-Alarm and HH-Alarm button and LED function:

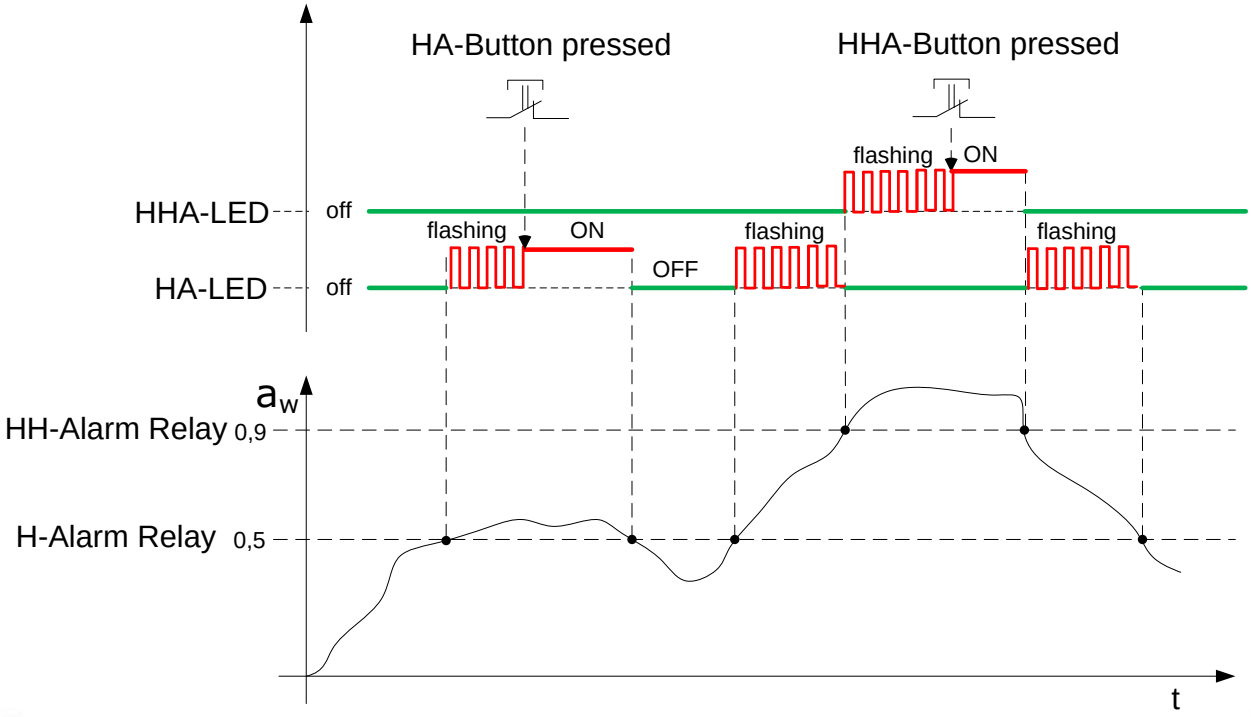

Figure 2: H-Alarm and HH-Alarm button function

IMPORTANT

The display is an indication of the water level in the oil. Display can be shipped as PPM or a_w.

Upon ordering a PPM display the customer must specify the water saturation point in PPM of the used oil at the preferred working temperature of the oil. The saturation point is typically between 3000-10000 PPM. Alternatively the customer can ship 10 liters of oil to PAJ Sensor A/S for inspection including specification of the working oil temperature.

WARNING

All displays will show from positive values when operating properly. There will appear a negative value during start-up, after 5 seconds the value will be in positive measurement range. Otherwise, if a negative value is present the Terminal box might have been installed incorrectly.

NOTE

WIO500 uses 3 different units for the measurement of water in oil:

1) **a_w**: WIO measures humidity in **a_w**. The range is 0.01…1.00 a_w.
2) **%RH** (relative humidity) is identical to the unit a_w multiplied by 100. The range is 1…100 %RH
3) **ppm**: WIO can convert **a_w** to **ppm**. In this case the saturation point, at a given temperature, must be known. Output in ppm is only reliable at this temperature.

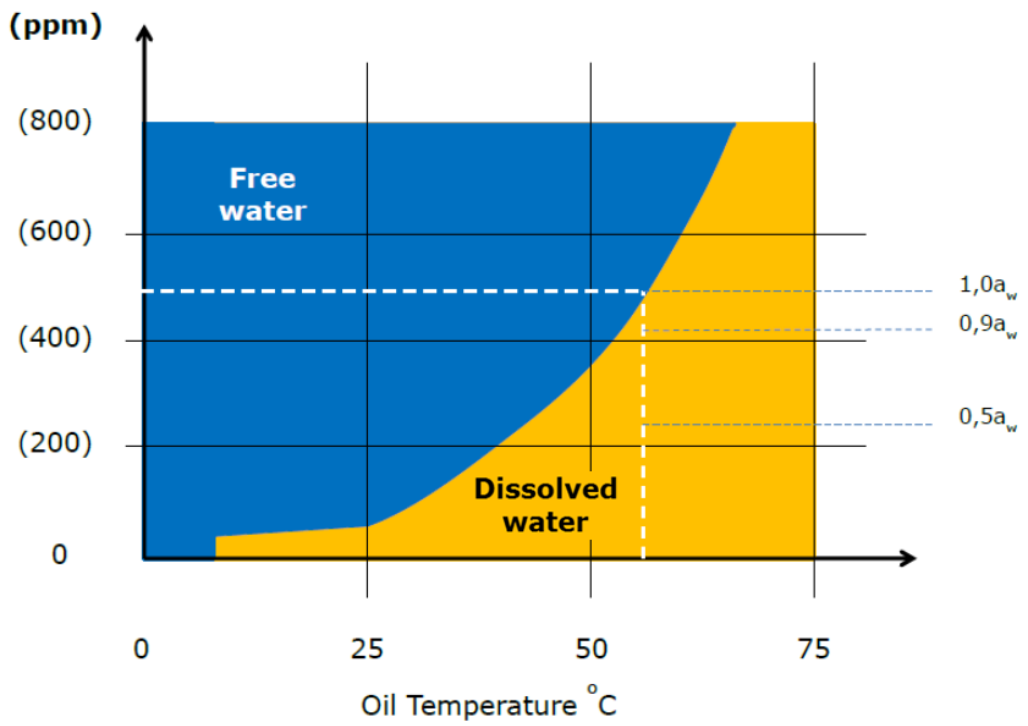

Technical Data Terminal Box Alarm Buzzer

Output	
Analogue output	See the specifications for sensor's analogue output
Digital output	See the specifications for sensor's digital output
Input	
Supply nominal voltage	24V DC ± 10%
Max. residual voltage ripple	10%
Maximum Load current	200 mA
Max. Power input	< 4,8 VA
Relays	
Contact arrangement	2 x Normally Open (NO)
Rated voltage	250 VAC
Max. switching voltage	400VAC
Rated current	2A
Breaking capacity max.	1250VA
Display version - a_w (water activity from 0,01 to 1,00**)**	
Accuracy (0,05-0,95 a_w)	± 0,03 a_w
Resolution	<0,004 a_w
Display version - PPM (H_2O)	
Accuracy (0,05-0,95 a_w)	±30%
Resolution	1 PPM
Display version - °C	
Accuracy	± 2°C
Resolution	0,01 °C

Buzzer	
Oscillation frequency	3000±500 Hz
Sound pressure level	85db by open housing
Tone	pulsed
Button with LED	
Blink frequency	2 Hz
Color	RED
Enclosure	
Weight	750 grams
Connection to sensor (mechanical)	2 x 8-pole connectors, male and female, M12x1 thread
Connection (mechanical)	2 x M20 gland, cable diameter 6 to 12 mm 1 x D-sub9, male
Enclosure material	Aluminum
Protective type	IP66
Warranty	2 years

FUNCTIONING

Terminal box shall be provided with 24vdc.
Terminal box supply 24vdc on to WIO sensor.
Terminal box measuring mA from the sensor, and convert it to a_w or PPM value.
WIO sensor delivers mA, digital values and relay status to the terminal box.

H-Alarm LED is for indication of the High Alarm relay state from the WIO sensor. When the alarm condition is generated by the WIO sensor, then the High Alarm relay is open and the H-Alarm LED flash red ON/OFF sequence to show the High Alarm state, and the alarm signal buzzer will be switched ON.

HH-Alarm LED is for indication of the High High Alarm relay state from the WIO sensor. When the alarm condition is generated by the WIO sensor, then the High High Alarm relay is open and the HH-Alarm LED flash red ON/OFF sequence to show the High High Alarm state, and the alarm signal buzzer will be switched ON.

The H-Alarm LED or HH-Alarm LED will stay in blinking mode until the H-Alarm or HH-Alarm button is pressed, then the LED constantly turned on. The alarm signal buzzer will stay on until the H-Alarm or HH-Alarm button is pressed.

Abstract representation of the H-Alarm and HH-Alarm button and LED function:

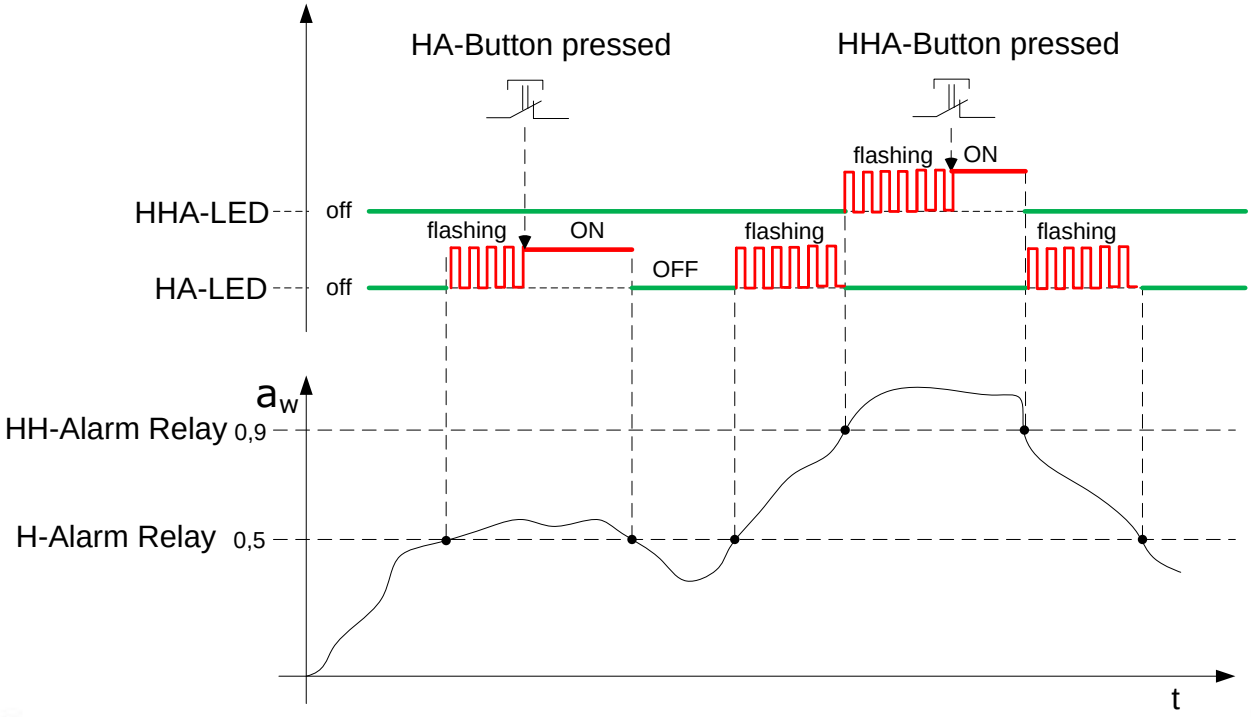

Figure 2: H-Alarm and HH-Alarm button function

IMPORTANT

The display is an indication of the water level in the oil. Display can be shipped as PPM or a_w.

Upon ordering a PPM display the customer must specify the water saturation point in PPM of the used oil at the preferred working temperature of the oil. The saturation point is typically between 3000-10000 PPM. Alternatively the customer can ship 10 liters of oil to PAJ Sensor A/S for inspection including specification of the working oil temperature.

WARNING

All displays will show from positive values when operating properly. There will appear a negative value during start-up, after 5 seconds the value will be in positive measurement range. Otherwise, if a negative value is present the Terminal box might have been installed incorrectly.

NOTE

WIO500 uses 3 different units for the measurement of water in oil:

1) **a_w**: WIO measures humidity in **a_w**. The range is 0.01…1.00 a_w.
2) **%RH** (relative humidity) is identical to the unit a_w multiplied by 100. The range is 1…100 %RH
3) **ppm**: WIO can convert **a_w** to **ppm**. In this case the saturation point, at a given temperature, must be known. Output in ppm is only reliable at this temperature.

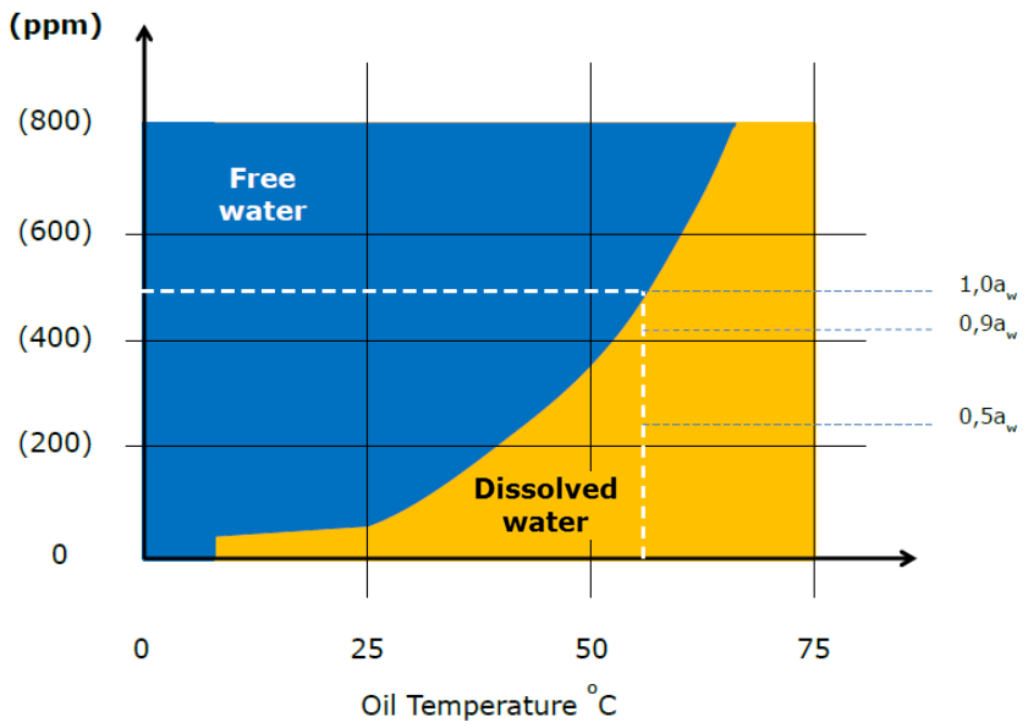

Technical data, WIOI (WIO Integrated)

Output	
Analogue output (galvanic isolated)	4 – 20 mA for a_w
Max. Load (analogue output)	< 500Ω
Measurement Range (4 – 20 mA)	0,01 – 1,00 a_w
Accuracy (0,05-0,95 a_w)	± 0,03 a_w
Accuracy (outside 0,05-0,95 a_w)	± 0,05 a_w
Resolution	< 0,004 a_w
Digital output	Communication CANopen
Communication Protocol	Modbus RTU
Input	
Supply nominal voltage	24V DC ± 10%
Max. residual voltage ripple	10%
Maximum Load current	200 mA
Max. Power input	< 4,8VA

Relays	
Contact arrangement	2 x Normally Open (NO)
Rated voltage	250VAC
Max. switching voltage	400VAC
Rated current	2A
Breaking capacity max.	1250VA
Max. DC Load breaking capacity	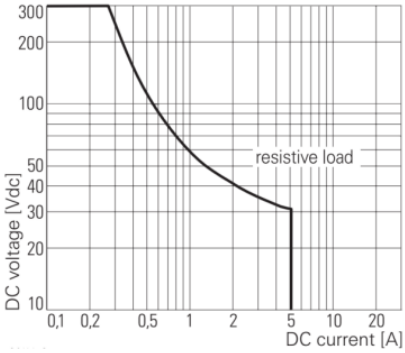
Relay 1	*„High Alarm"*
Relay 2	*„High High Alarm"*
Default High Alarm	0,50 a_w
Default High High Alarm	0,90 a_w

Cable specification	
Cable design	Multipair overall screened cable
Outlet diameter	9,9 mm
Voltage class	0,6/1kV
Wires	4x2 twisted pair
Wire gauge	0,75 mm^2
Media for measurement	
Lubrication oil	Grade SAE 30/TBN 5-10
Max. Oil temperature	90°C
Max. Oil pressure	Sensor mounting method in application: Ball valve mounted: Max. 10 Bar Thread mounted: Max. 20 Bar
Response times	
Delay before valid data from start-up	< 30 s
Delay before valid data from installation (first use)	10 minutes

Device Failure Indication	
Analogue output	< 2 mA
Manual test	
Press sensor test-button for 5 seconds	High Alarm turns on for 5 seconds
Press sensor test-button for 10 seconds	High Alarm turns off High High Alarm turns on for 5 seconds
Press sensor test-button for 15 seconds	Normal operating and test button ignored

Display version - a_w (water activity from 0,01 to 1,00**)**	
Accuracy (0,05-0,95 a_w)	± 0,03 a_w
Resolution	<0,004 a_w
Display version - PPM (H_20)	
Accuracy (0,05-0,95 a_w)	±30%
Resolution	1 PPM
Buzzer	
Oscillation frequency	3000±500 Hz
Sound pressure level	85db by open housing
Tone	pulsed
Button with LED	
Blink frequency	2 Hz
Color	RED
Enclosure	
Weight	4000 grams
Connection (mechanical)	ISO 228-1 G ½" or ¾" thread 2 x gland M20, cable diameter 6 to 12 mm 1 x D-sub9, male
Enclosure material	Stainless Steel/Aluminum EN44100 (Former 4261)
Protective type	IP66

Miscellaneous	
Ambient Temperature, running / storage	0 - 90°C / -30 - +95°C
Relative humidity for running and storage	10% up to 95%, no condensation
Re calibration	Recommended with max 3 years interval
Warranty	2 years
Approvals	
Germanischer Loyd	WIO products are EU approval under 75 965 – 09 HH date 2009-11-30

FUNCTIONING

Terminal box shall be provided with 24vdc.
Terminal box supply 24vdc on to WIO sensor.
Terminal box measuring mA from the sensor, and convert it to a_w or PPM value.
WIO sensor delivers mA, digital values and relay status to the terminal box.

H-Alarm LED is for indication of the High Alarm relay state from the WIO sensor. When the alarm condition is generated by the WIO sensor, then the High Alarm relay is open and the H-Alarm LED flash red ON/OFF sequence to show the High Alarm state, and the alarm signal buzzer will be switched ON.

HH-Alarm LED is for indication of the High High Alarm relay state from the WIO sensor. When the alarm condition is generated by the WIO sensor, then the High High Alarm relay is open and the HH-Alarm LED flash red ON/OFF sequence to show the High High Alarm state, and the alarm signal buzzer will be switched ON.

The H-Alarm LED or HH-Alarm LED will stay in blinking mode until the H-Alarm or HH-Alarm button is pressed, then the LED constantly turned on. The alarm signal buzzer will stay on until the H-Alarm or HH-Alarm button is pressed.

Abstract representation of the H-Alarm and HH-Alarm button and LED function:

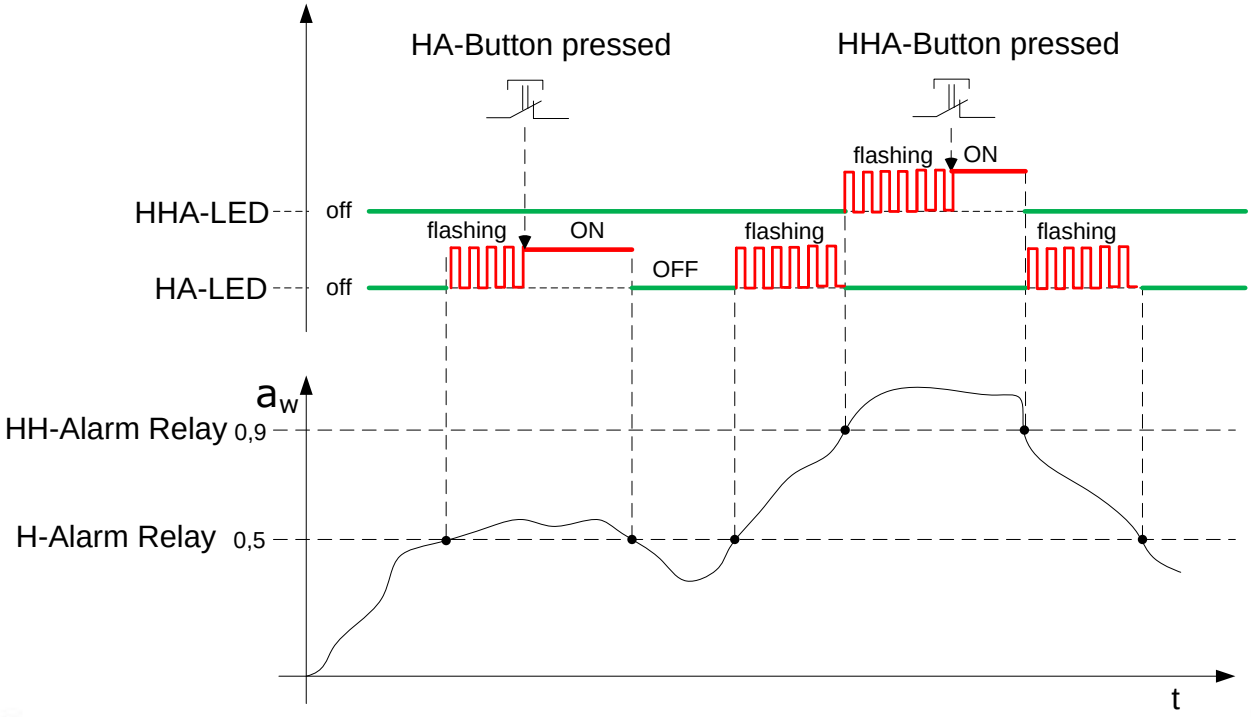

Figure 2: H-Alarm and HH-Alarm button function

IMPORTANT

The display is an indication of the water level in the oil. Display can be shipped as PPM or a_w.

Upon ordering a PPM display the customer must specify the water saturation point in PPM of the used oil at the preferred working temperature of the oil. The saturation point is typically between 3000-10000 PPM. Alternatively the customer can ship 10 liters of oil to PAJ Sensor A/S for inspection including specification of the working oil temperature.

WARNING

All displays will show from positive values when operating properly. There will appear a negative value during start-up, after 5 seconds the value will be in positive measurement range. Otherwise, if a negative value is present the Terminal box might have been installed incorrectly.

NOTE

WIO500 uses 3 different units for the measurement of water in oil:

1) **a_w**: WIO measures humidity in **a_w**. The range is 0.01…1.00 a_w.
2) **%RH** (relative humidity) is identical to the unit a_w multiplied by 100. The range is 1…100 %RH
3) **ppm**: WIO can convert **a_w** to **ppm**. In this case the saturation point, at a given temperature, must be known. Output in ppm is only reliable at this temperature.

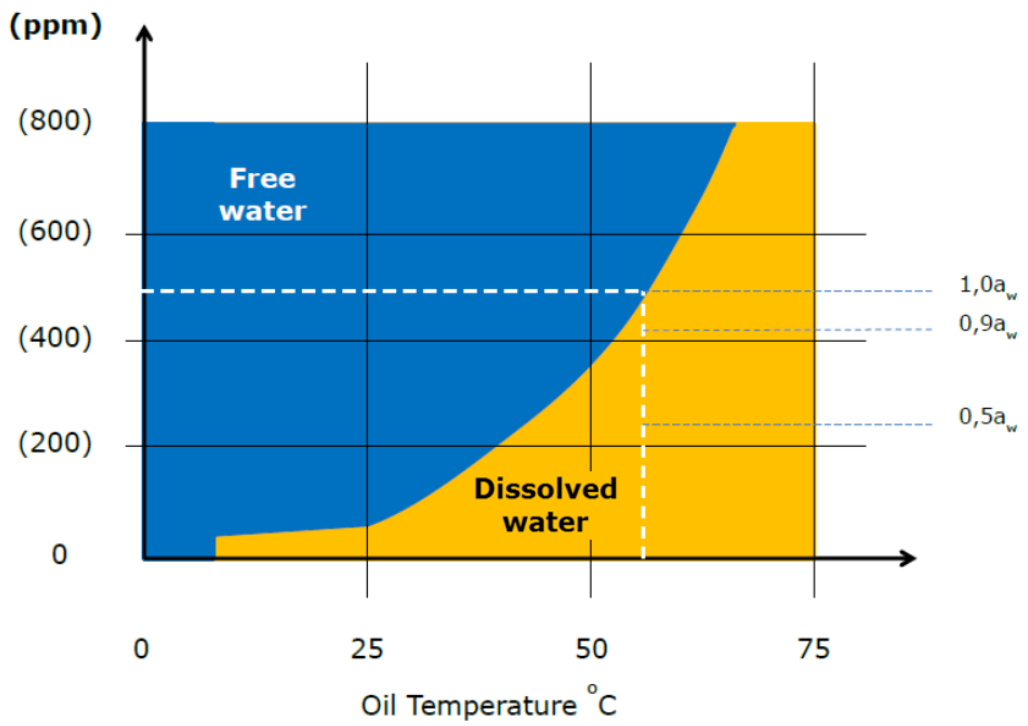

Description of CANopen protocol functionality

The WIO500 sensor implements a standard CANopen protocol state machine, and 2 TX PDO's
Details about the CANopen protocol can be found at www.can-cia.org
Besides the registers described here, the WIO500 device also implements a standard state machine for node state, error handling etc.

Object dictionary for module:

Generic CANopen objects

Index (HEX)	Subindex	Object name	Data type	Range	Default values	Access
1000	-	Device type	U32		0x5749 4F35 ('WIO5')	RO
1001	-	Error register	U8		Acc. to CAN Cia	RO
1002	-	Status reg	U32			RO
100A	-	SW Version	String		V001	
1017	-	Heartbeat time	U16	10-6000	2000ms	RW
1018	1	Vendor ID	U32		Assigned by CAN Cia	RO
1018	2	Product code	U32			RO
1018	3	Revision Number	U32			RO
1018	4	Serial Number	U32			RO

Configuration of TX PDO1

Index (HEX)	Subindex	Object name	Data type	Range	Default values	Access
1800	2	Type	U8	0-255	254	RW
1800	3	Inhibit time	U16	10-60000	50 (=5ms)	RW
1800	5	Event timer	U16	10-6000	100 ms	RW

Configuration of TX PDO2

Index (HEX)	Subindex	Object name	Data type	Range	Default values	Access
1801	2	Type	U8	0-255	254	RW
1801	3	Inhibit time	U16	10-60000	50 (=5ms)	RW
1801	5	Event timer	U16	10-6000	100 ms	RW

Appearance of TX PDO1 (Measurements)

Since COB ID of TX PDO1 is always mapped with (binary) 0011 + Device ID, for example the identifier for module address 1 is then 0x181.

	11 bit identifier of TX PDO 1 (shown for module 1)										
	Function Code				Device ID						
Bit	10	9	8	7	6	5	4	3	2	1	0
Value	0	0	1	1	0	0	0	0	0	0	1
Value	0x181										

	COB ID	**Data byte 0-1**	**Data byte 2-5**	**Data byte 6-7**
Value	0x181	Temperature (I16) °C	Measured moist in aW (REAL)	PPM Value

Appearance of TX PDO2 (Measurements)

Since COB ID of TX PDO2 is always mapped with (binary) 0101 + Device ID, for example the identifier for module address 1 is then 0x181.

	11 bit identifier of TX PDO 1 (shown for module 1)										
	Function Code				Device ID						
Bit	10	9	8	7	6	5	4	3	2	1	0
Value	0	0	1	1	0	0	0	0	0	0	1
Value	0x181										

	COB ID	**Data byte 0-1**	**Data byte 2-4**
Value	0x281	Temperature (I16) °C	PPM Value

Module specific values (SDO's)

Index (HEX)	**Subindex**	**Object name**	**Data type**	**Range**	**Default vales**	**Access**
2000	1	Read relay status of HA	BOOL	0 = Alarm 1 = No Alarm	1	RO
2000	2	Read relay status of HHA	BOOL	0 = Alarm 1 = No Alarm	1	RO
2000	3	Factory reset allowed	BOOL	0 = Normal 1= Factory reset	1	RW
2001	1	HA alarm level	REAL	0-100%	50	RW
2001	2	HHA alarm level	REAL	0-100%	90	RW

2001	3	Calibration date	U32		1/1 - 1900	RW
2001	4	PPM max value	U32		1000	RW
2002	1	Temperature	I16	-4000 – 18000 -40 - 180°C		RO
2002	2	Measured moist. in aW	REAL	0.01 – 1		RO
2002	3	PPM Value	U16	0-65535		RO
2002	4	Temperature	I16	-4000 – 18000 -40 - 180°F		RO
2003	1	Measured moist in mA	U16	400-2000 (100 * mA)	2000	RO
2003	2	Temperature in mA	U16	400-2000 (100 * mA)	2000	RO
2003	3	PPM Value in mA	U16	400-2000 (100 * mA)		RO
2004	1	perform factory reset	U16	0xBEEF = Reset		WO
2004	2	Change module ID	U8	1-127	1	RW
2004	3	Change baud rate	U8	Table acc. To Cia		WO
2004	4	Set termination resistor	BOOL	0 = No termination 1 = Term. enabled		RW

CAN adapter setting

Default Baudrate	125000

Communication for reading Index 0x2000 subindex 1 (HA relay status), from node ID 1

Request to WIO

CobID	Byte 0	Byte 1	Byte 2	Byte 3	Byte 4	Byte 5	Byte 6	Byte 7
0x601	0x40	0x00	0x20	0x01	0x00	0x00	0x00	0x00

CobID: 0x601 (binary 11000000001) is composed of function code 1100 (SDO receive), and 7 bit node ID, (0000001)
Byte 0: Initiate download (reading)
Byte 1: least significant byte of Index (0x2000)
Byte 2: most significant byte of Index (0x2000)
Byte 3: subindex
Byte 4-7: Unused bytes, these are transmitted regardless, since SDO transfer always uses 8 byte data length frames.

Response from WIO

CobID	Byte 0	Byte 1	Byte 2	Byte 3	Byte 4	Byte 5	Byte 6	Byte 7
0x581	0x42	0x00	0x20	0x01	0x01	0x00	0x00	0x00

CobID: 0x581 (binary 10110000001) is composed of function code 1011 (SDO transmit), and 7 bit node ID, (0000001)
Byte 0: Initiate download, expedited transfer
Byte 1: least significant byte of Index (0x2000)
Byte 2: most significant byte of Index (0x2000)
Byte 3: subindex
Byte 4: Data value
Byte 5-7: Unused bytes, these are transmitted regardless, since SDO transfer always uses 8 byte data length frames.

Communication for writing value “80” to Index *0x2001 subindex 2 (HHA alarm level), to node ID 2*

Request to WIO

CobID	Byte 0	Byte 1	Byte 2	Byte 3	Byte 4	Byte 5	Byte 6	Byte 7
0x602	0x22	0x00	0x20	0x02	0x00	0x00	0xA0	0x42

CobID: 0x602 (binary 11000000010) is composed of function code 1100 (transmit from server), and 7 bit node ID, (0000010)
Byte 0: Initiate upload, expedited
Byte 1: least significant byte of Index (0x2000)
Byte 2: most significant byte of Index (0x2000)
Byte 3: subindex
Byte 4-7: the bytes is is put together to form a single precision real value, 0x42A00000 = 80

Acknowledge from WIO

CobID	Byte 0	Byte 1	Byte 2	Byte 3	Byte 4	Byte 5	Byte 6	Byte 7
0x582	0x20	0x00	0x20	0x02	0x00	0x00	0x00	0x00

CobID: 0x581 (binary 10110000010) is composed of function code 1011 (transmit from server), and 7 bit node ID, (0000010)
Byte 0: Initiate upload
Byte 1: least significant byte of Index (0x2000)
Byte 2: most significant byte of Index (0x2000)
Byte 3: subindex
Byte 4: Data value
Byte 5-7: Unused bytes, these are transmitted regardless, since SDO transfer always uses 8 byte data length frames.

PAJ Sensor have used the MODBUS application protocol V1.1b3, which can be downloaded from http://modbus.org.

Command list all value are HEX value

Item	Function code	Address	descriptions
Read relay status of HA	01	26	Relay is enabled = 1 => no alarm
Read relay status of HHA	01	27	Relay is enabled = 1 => no alarm
Read factory reset bit status	01	2A	Data = 1 => WIO is ready for factory reset
Read termination resistor status	01	28	Data = 1 => Resistor is omitted (see CANopen guideline)
Read HA alarm level	03	1E	Data have to be recalculated to aW value for HA alarm
Read HHA alarm level	03	20	Data have to be recalculated to aW value for HHA alarm
Read WIO S/N	03	04	S/N of connected WIO device
Read calibration date	03	31&32	Date of calibration. Year month day
Read WIO type	03	23	Data = 4 => WIO400
Read PPM max value	03	2D	PPM saturations point at a given °C
Read °C	04	06	The measured temperature of the sensor
Read aW	04	07	The measured moist in aW from the sensor
Read mA output for aW	04	2C	The mA output for aW from WIO sensor
Read mA output for °C	04	2E	The mA output for °C from WIO sensor
Read current PPM value	04	34	mA value converted into a PPM value
Read °F	04	35	The measured temperature of the sensor
Set factory reset bit	05	2A	Make the Wio ready for factory reset
Set termination resistor	05	28	Activate the termination Resistor (see CANopen guideline)
Complete factory reset	06	08	Before complete factory reset, must factory reset bit = 1
Change Modbus ID on WIO	06	24	Change the ID nr (Valid data is 01 – FA) from factory 01
Change HA alarm level	10	1E	aW must be calculated to HEX. Factory value is 0,50aW
Change HHA alarm level	10	20	aW must be calculated to HEX. Factory value is 0,90aW
Change Modbus ID on WIO	00	24	Change the ID nr (Valid data is 01 – FA) from factory 01

All read out value in function code 04, must be rewritten for decimal numbers, and divided by 100.
WIO-Software will automatically use the appropriate commands for displaying data.

Com Port setting

Baudrate	9600
Data bits	8
Parity	0 (none)
Stop bits	1

Communication examples for function code 01

Read factory reset bit status

Request from user		Response from WIO	
Modbus ID	01	Modbus ID	01
Function code	01	Function code	01
Starting address Hi	00	Byte count	01
Starting address Lo (factory reset bit status)	2A	Output status	00
Quantity of outputs Hi	00	CRC	51
Quantity of outputs Lo	01	CRC	88
CRC Hi	DC		
CRC Lo	02		

Communication examples for function code 03

Read WIO type

Request from user		Response from WIO400	
Modbus ID	01	Modbus ID	01
Function code	03	Function code	03
Starting address Hi	00	Byte count	02
Starting address Lo (WIO type)	23	Output status Hi	00
Quantity of outputs Hi	00	Output status Lo	03
Quantity of outputs Lo	01	CRC	F8
CRC Hi	75	CRC	45
CRC Lo	C0		

Communication examples for function code 04

Read measured temperature

Request from user		Response from WIO (22,25°C)	
Modbus ID	01	Modbus ID	01
Function code	04	Function code	04
Starting address Hi	00	Byte count	02
Starting address Lo (Read °C)	06	Output status Hi	08
Quantity of outputs Hi	00	Output status Lo	B1
Quantity of outputs Lo	01	CRC	7E
CRC Hi	D1	CRC	84
CRC Lo	CB		

08B1 is a HEX value, rewritten for decimal numbers is 2225, it must be divided by 100 and the result is 22,25°C
All read out value in function code 04, must be rewritten for decimal numbers, and divided by 100.

Communication examples for function code 05

Set factory reset bit

Request from user		Response from WIO	
Modbus ID	01	Modbus ID	01
Function code	05	Function code	05
Starting address Hi	00	Starting address Hi	00
Starting address Lo (factory reset bit status)	2A	Starting address Lo	2A
Register Value Hi	FF	Output status Hi	FF
Register Value Lo	00	Output status Lo	00
CRC Hi	AC	CRC	AC
CRC Lo	76	CRC	76

Communication examples for function code 06

Complete the factory reset

Request from user		Response from WIO	
Modbus ID	01	Modbus ID	01
Function code	06	Function code	06
Starting address Hi	00	Starting address Hi	00
Starting address Lo (factory reset complete)	08	Starting address Lo	08
Quantity of outputs Hi	00	Output status Hi	00
Quantity of outputs Lo	01	Output status Lo	01
CRC Hi	C9	CRC	C9
CRC Lo	C8	CRC	C8

Before complete factory reset, the factory reset bit must be set to 01

Communication examples for function code 10

Change HA alarm level to 0,55 aW

Request from user		Response from WIO	
Modbus ID	01	Modbus ID	01
Function code	10	Function code	10
Starting address Hi	00	Starting address Hi	00
Starting address Lo (HA alarm level)	1E	Starting address Lo	1E
Quantity of outputs Hi	00	Output status Hi	00
Quantity of outputs Lo	02	Output status Lo	02
Byte count	04	CRC	21
Register Value Hi	CD	CRC	CE
Register Value Lo	CC		
Register Value Hi	0C		
Register Value Lo	3F		
CRC Hi	C8		
CRC Lo	AC		

CRC Calculation

Use google, search for: on-line Modbus CRC calculation.
Put in the calculator (only HEX value) 0101002A0001.
The calculator can give you 2 result 02DC or DC02.
If the result is 02DC, then just put 02 behind DC, and the CRC result will be DC02.
If the result is DC02. Then you have the CRC value

Error codes

If you get a response back by a factor of 80 higher, as in the example shown, it is 3. digit explanation of the error code.

Example 1.
Request from user to WIO: 01 01 00 25 00 01 EC 01
Response from WIO: 01 81 02 C1 91

Message 81 means that there is an error in the transmitted function code 01.
Message 02 means that it is the wrong address.

Example 2.
Request from user to WIO: 01 10 00 1D 00 02 04 00 00 10 3F 7E EA
Response from WIO: 01 90 02 CD C1

Message 90 means that there is an error in the transmitted function code 10.
Message 02 means that it is the wrong address.

Example 3.
Request from user to WIO: 01 05 00 28 00 FF 0D 82
Response from WIO: 01 85 03 02 91

Message 85 means that there is an error in the transmitted function code 05.
Message 03 means that it is the wrong data for this address.

There are 4 possible error digit.

01 function code not supported
02 wrong address
03 to many output registers are selected or wrong input of data
04 error in reading the selected register

Table for aW to HEX value

aW value	HEX value	aW value	HEX value
0,10	CD CC CC 3D	0,15	9A 99 19 3E
0,20	CD CC 4C 3E	0,25	00 00 80 3E
0,30	98 99 99 3E	0,35	33 33 B3 3E
0,40	CD CC CC 3E	0,45	66 66 E6 3E
0,50	00 00 00 3F	0,55	CD CC 0C 3F
0,60	9A 99 19 3F	0,65	66 66 26 3F
0,70	33 33 33 3F	0,75	00 00 40 3F
0,80	CD CC 4C 3F	0,85	9A 99 59 3F
0,90	66 66 66 3F	0,95	33 33 73 3F

WIO-Software

Connect the USB-Stick to the PC and wait for windows has installed driver for this USB-Stick on PC. Then select Setup and wait until everything is installed. After install is completed, restart the PC and start WIO-Software, WIO-Software will even find the current communication port.

CANbus Guidelines

As its name implies, a twisted pair is simply a pair of wires of equal length and twisted together. Using a twisted-pair wire reduces two major sources of problems for users of high-speed long distance networks. It reduces noise on the transmitted and received signals.

An important condition for communication over long distance is that the transmission lines are properly terminated with a termination resistor (R_T) of 120 Ω. Which is typically is the characteristic impedance of a twisted-pair wire. If the resistance is omitted, the signals sent on the wire, will be reflected where the cable physically ends and hike back on the cord. Here they will interfere with subsequent transmitted signals. For long cable runs, this can cause data errors, especially at high speeds.

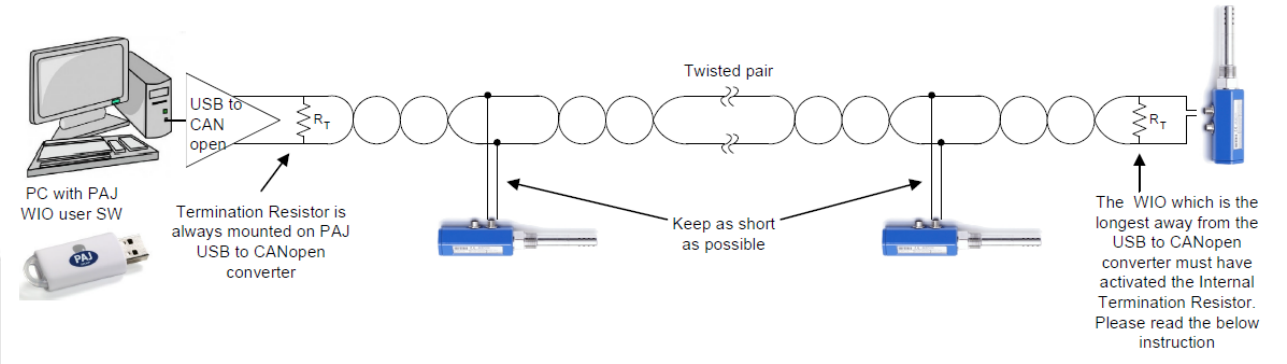

There is a built-in termination resistor in the WIO, which can be connected with Function code 05 address 29 or use PAJ WIO user software.

The maximum number of unit loads allowed on a twisted pair, assuming a properly terminated cable with a characteristic impedance of 120 Ω or more, is 32 units.

For CANopen communication is the maximum cable length is 1000 meter, at a communication speed of 50 kbit/s.

Each WIO must have an individual ID nr, for communication. Connect one WIO to the system and change the ID nr on the connected WIO, then connect the next WIO and then change the next ID nr on the connected WIO.
Change an ID can be done with function code 06 address 24 or use PAJ WIO user software.

EC-Declaration of Conformity

PAJ Group, Grundtvigs Allé 163, DK-6400 Sønderborg, Denmark
Manufactory

Declare under our sole responsibility that the product:

unit identification: **WIO200 – WIO300 – WIO400 – WIO500**

product classification: **Water In Oil measuring instrument**

is a safety tested component according to EC Guideline:

2004/108/EC Electromagnetic compatibility
2006/95/EC Low voltage directive

to which this declaration relates is in conformity with the following standard(s) or other normative documents(s):

IEC 61326-1:2006-11-03, EN 61010-1:2001, EN 60529 Edition 2.1 2001-02,
IEC 60068-1:1988, IEC 60068-2-2:2007, IEC 60068-2-1:2007, IEC 60068-2-30:2005,
IEC 60068-2-6:2007, IEC 61000-4-16:1998-01, IEC 61000-4-6:2007, IEC 61000-4-3:2006,
IEC 61000-4-5:2005, IEC 61000-4-2:2001, IEC 61000-4-4:2004

The described product corresponds to the following European Directives:

2004/108/EC Electromagnetic compatibility
2006/95/EC Low voltage directive

Consistency of a production sample device with the marked product in accordance with the Directives No:

2004/108/EC Electromagnetic compatibility
2006/95/EC Low voltage directive

Notified agency/Address:

Germanischer Lloyd AG Head Office
Deputy Head of Department
Automation, Navigation and Communication (MC-EA)
Vorsetzen 35
D-20459 Hamburg/Germany

75 956 – 09 HH
Certification number

2009-11-30
Date of issue

The marked product is consistent with the examined production sample device.

Technical documentation:

Poul Jessen

Grundtvigs Allé 163 • DK-6400 Sønderborg • Tel: +45 74 43 71 81 • E-Mail: paj@paj.dk

Sønderborg, 15.04.2011
Date of issue

Poul Jessen, Managing Director
Name and signature

Type Approval Certificate Germanischer Lloyd

This is to certify that the undernoted product(s) has/have been tested in accordance with the relevant requirements of the GL Type Approval System.

Certificate No.	**7595609 HH**
Company	**PAJ Systemteknik** **Grundtvigs Allé 163** **6400 Sonderborg, DENMARK**
Product Description	**Water in Oil Monitor**
Type	**WIO200**
Environmental Category	**D, EMC 2**
Technical Data / Range of Application	**Sensor which measures water content in lubrication oils on ship engine** **Condition Monitoring Component (according to GL I-1-17, Section 2, D.2.)** **WIO Sensor system nr: A01-110-0100-00** **Consists of:** **- WIO Sensor nr: A01-110-0101-00** **- Terminal Box nr: A01-110-0102-00** **- Sensor cables 2 pcs. Order nr: A01-110-0103-00** **The technical specification is shown on page 2.** **Software Version 111197-810 Rev 1.00**
Test Standard	**Guidelines for the Performance of Type Approvals Chapter 2, Edition 2003**
Documents	**Test report : 2009-02260 EMC, 2009-01456, 2009-01456R2LM, 2009-02373** **111197-900 WIO Sensor Specifications Rev.1.00, Datasheet 111197-902 Rev.1.00** **Software Questionaire according to requirement class 3, dated 28.09.2009**
Remarks	**Rules GL I-1-17 to be observed for Condition Monitoring (CM). Alarm settings have to be specified by engine manufacturer if sensor is used for CM.**
Valid until	**2014-11-29**

Page **1** of **2**

Type Approval Symbol GL

File No. **I.A.10**

Hamburg, 2009-11-30

Germanischer Lloyd Jürgen Wittburg Marco Rinkel

This certificate is issued on the basis of "Regulations for the Performance of Type Tests, Part 0, Procedure".

Internet Publication: GL-Approvals

Type Approval Certificate Germanischer Lloyd

This is to certify that the undernoted product(s) has/have been tested in accordance with the relevant requirements of the GL Type Approval System.

Certificate No. **7595609 HH**

Technical Specification:

Measuring range: 0,01 to 1,00 aw water content.
Accuracy: ±0,03 aw for the range 0...1 aw water content
Resolution: Minimum 0,01 aw water content.
Analogue output: 4 to 20 mA (galvanic isolated) 0,01 to 1 aw water content linear
Max. Load (analogue outp.) < 500Ohm
Alarm indications. Alarm indication via 2 x Alarm relays (NC).
Media for measurement: Lubrication oil: Grade SAE 30/TBN 5-10
Service temperature of media: 10 to 60 ºC.
Pressure range: 0 to 10 bar

Valid until **2014-11-29**

Page **2** of **2**

Type Approval Symbol

File No. **I.A.10**

Hamburg, 2009-11-30

Germanischer Lloyd Jürgen Wittburg Marco Rinkel

This certificate is issued on the basis of "Regulations for the Performance of Type Tests, Part 0, Procedure".

Internet Publication: GL-Approvals

Appendix A1: Install 1 Terminal Box with 1 display

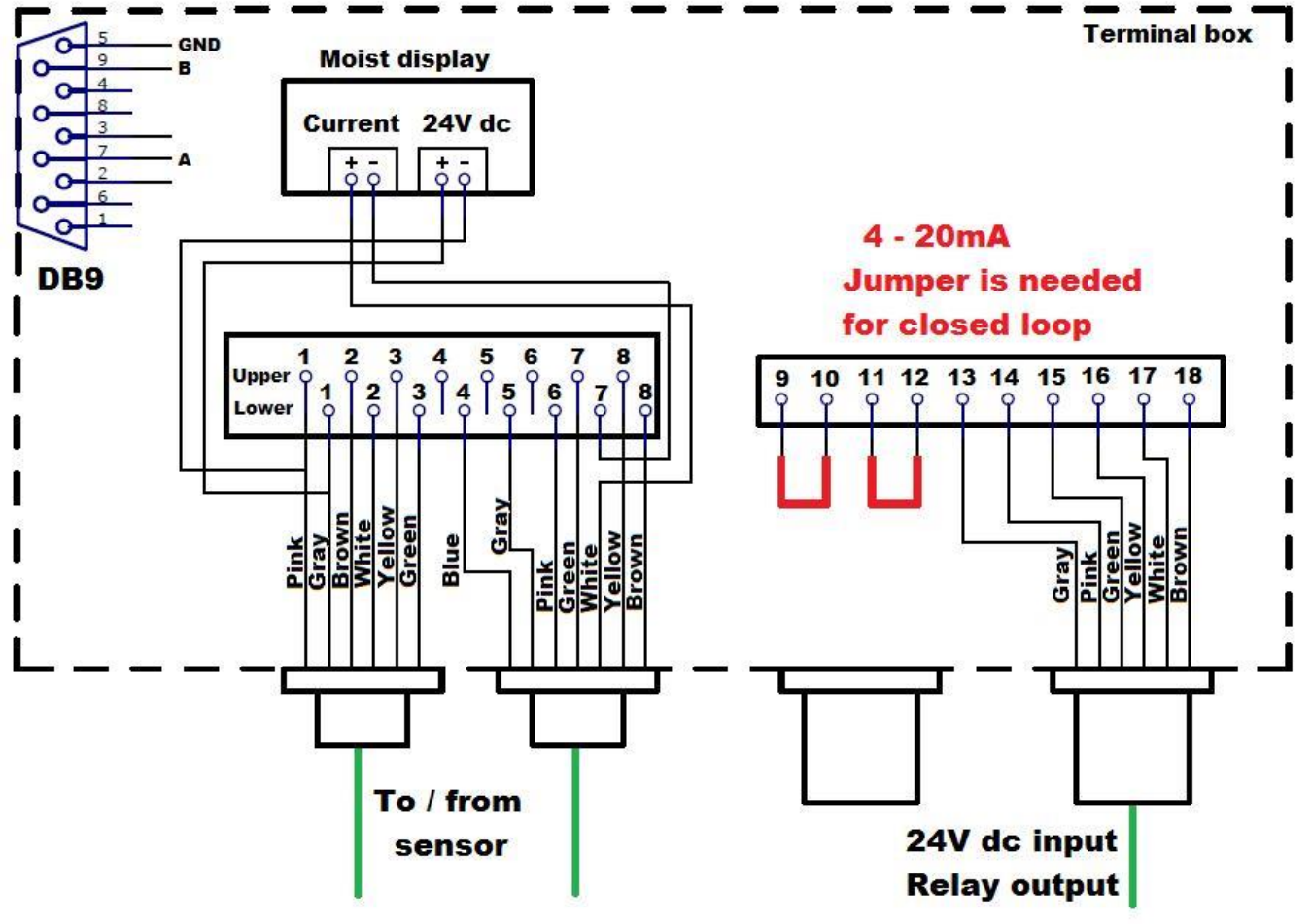

Appendix A2: Install 1 Terminal Box with no display

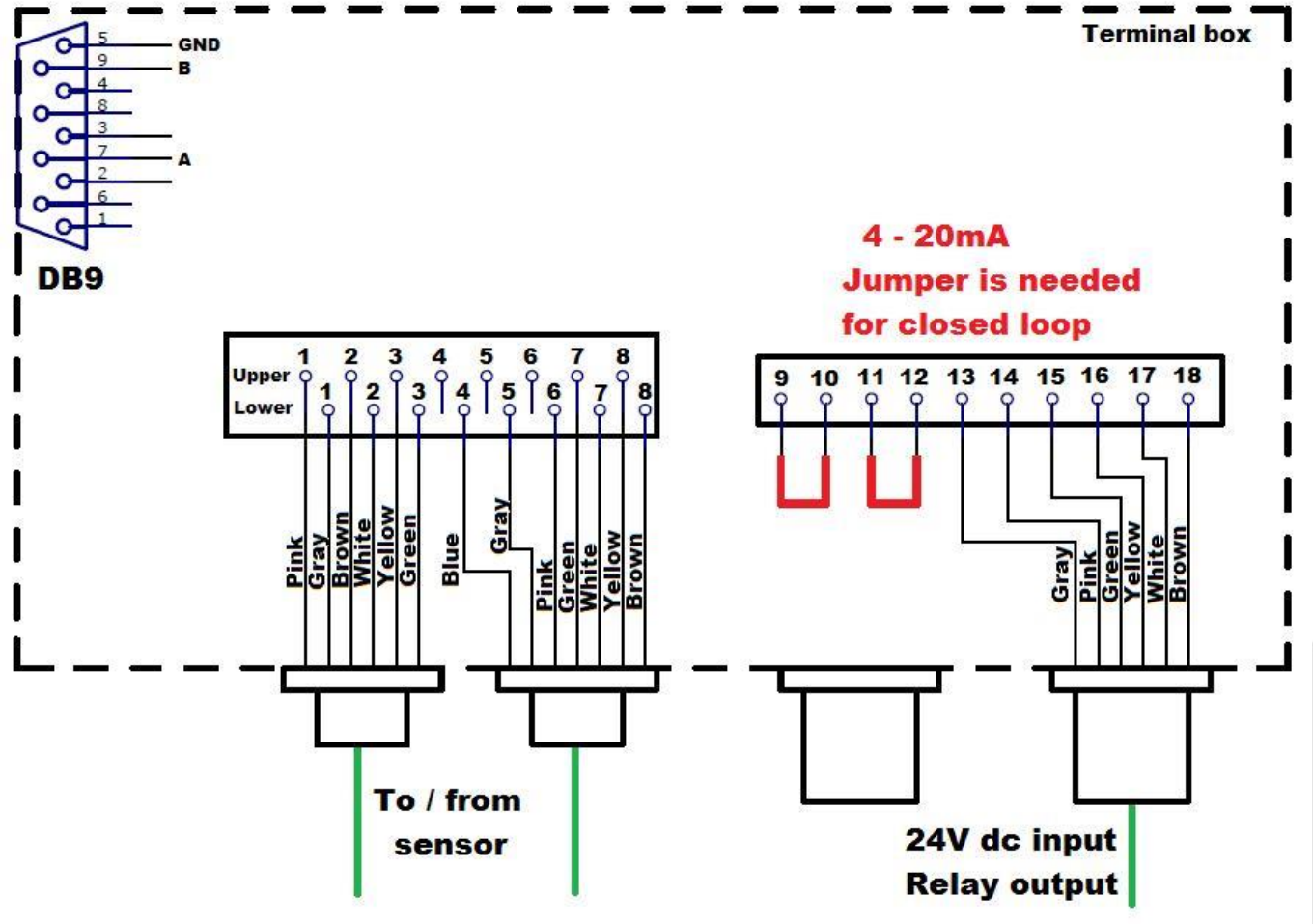

Appendix A3: Install 2 Terminal Boxes with 3 display

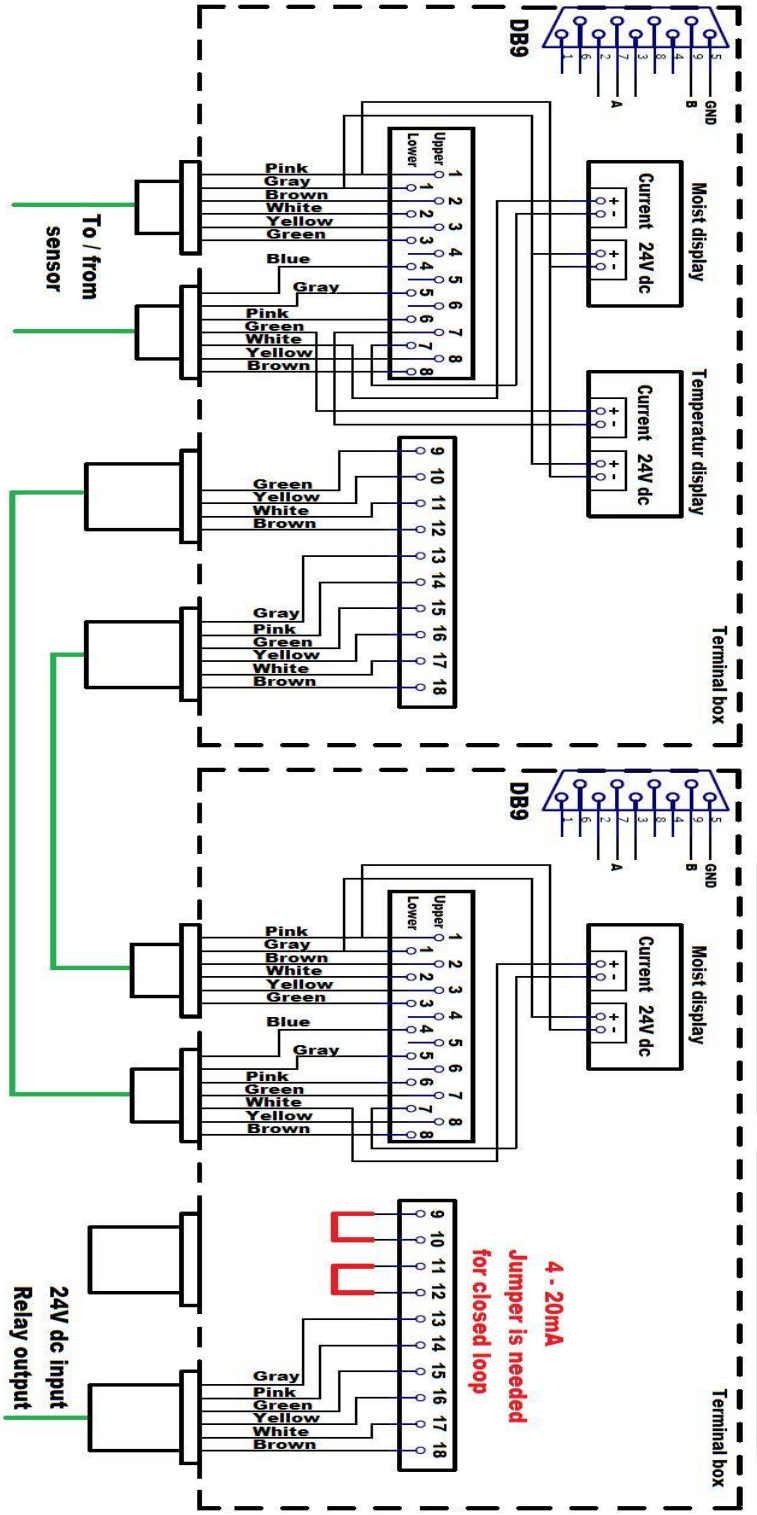

Appendix A4: Install 2 Terminal Boxes with 1 display

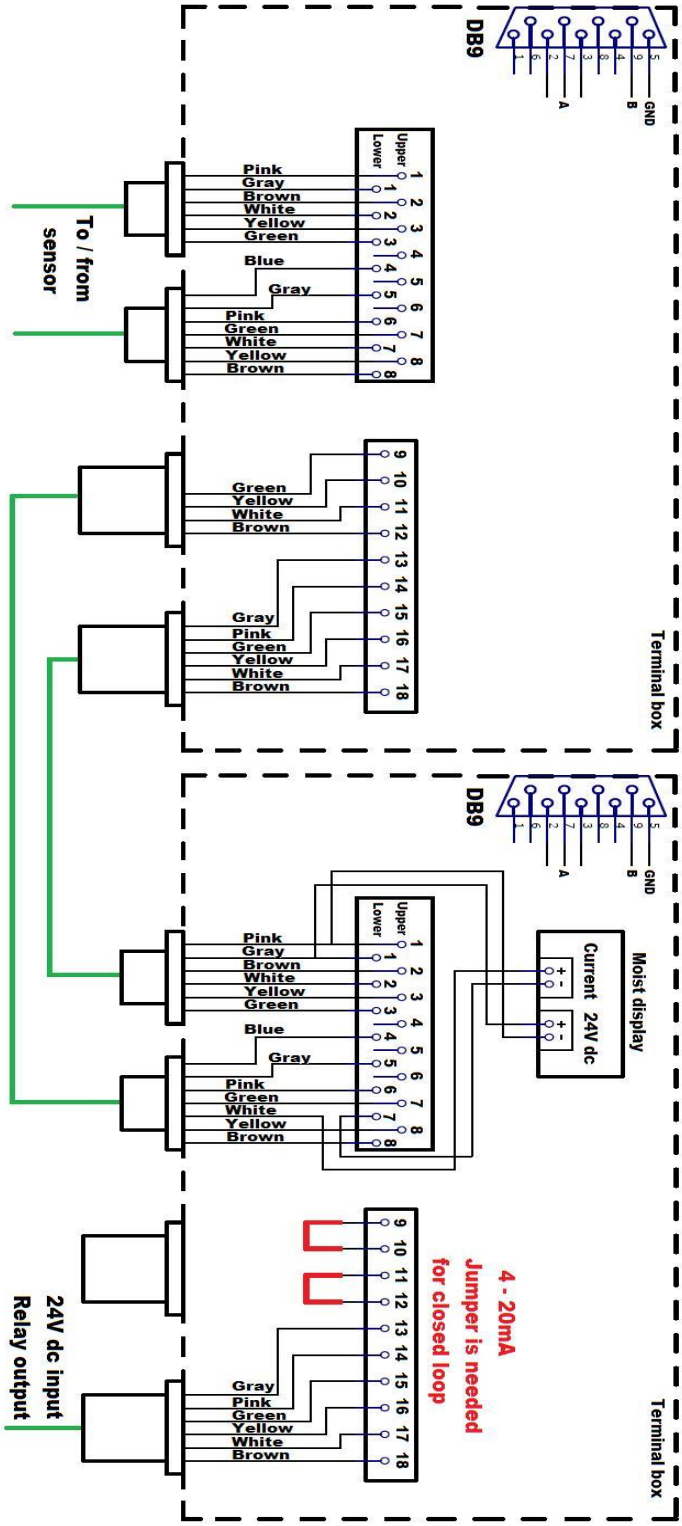

Appendix A5: Install 2 Terminal Boxes with 2 display

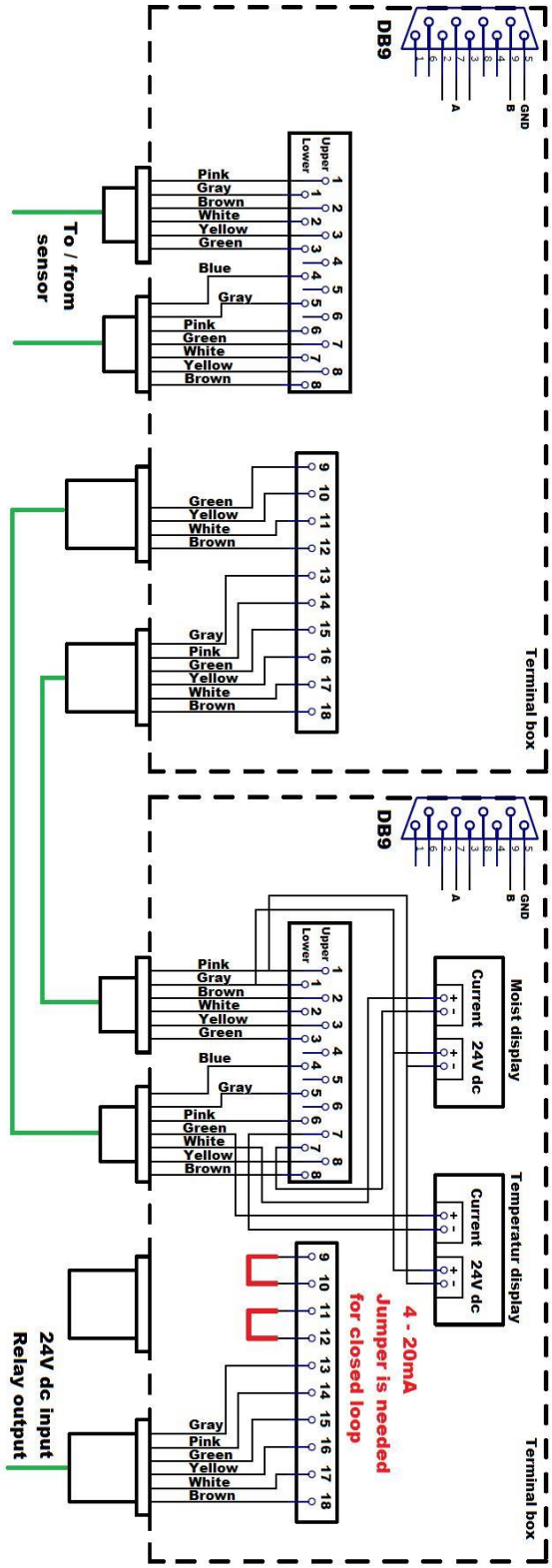

Appendix A6: Install 3 Terminal Boxes with 4 display

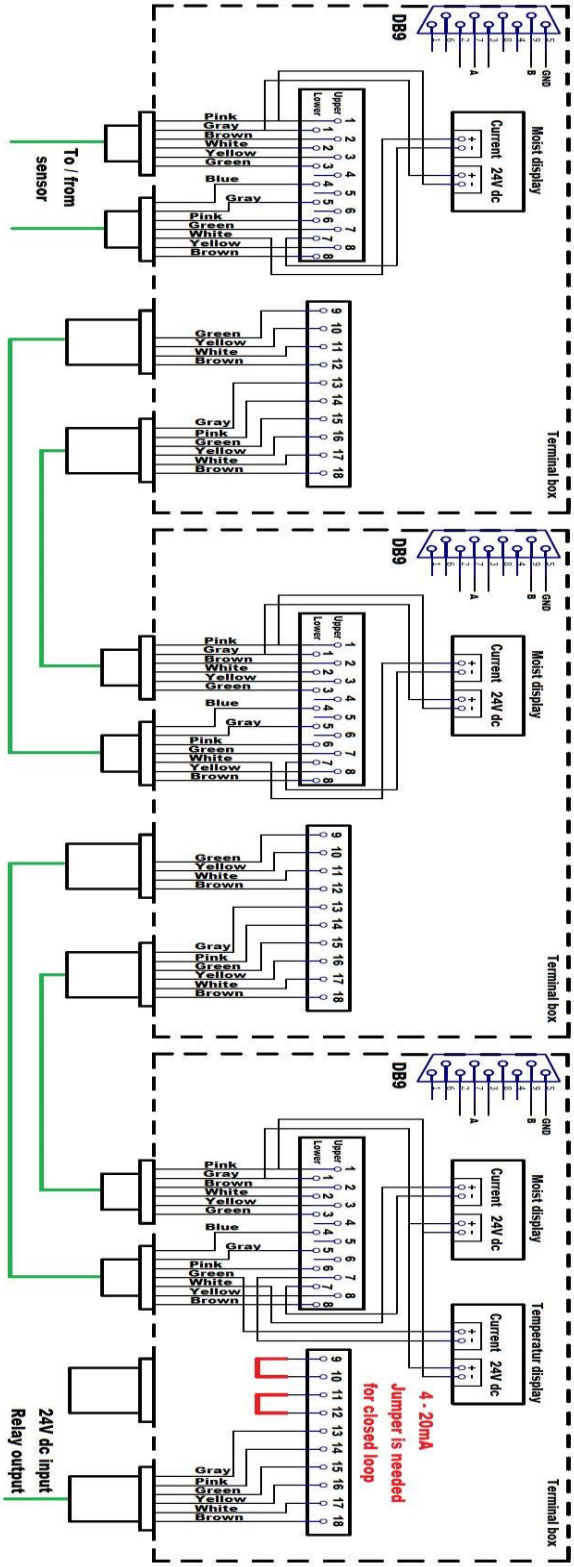

Appendix A7: Install 3 Terminal Boxes with 3 display

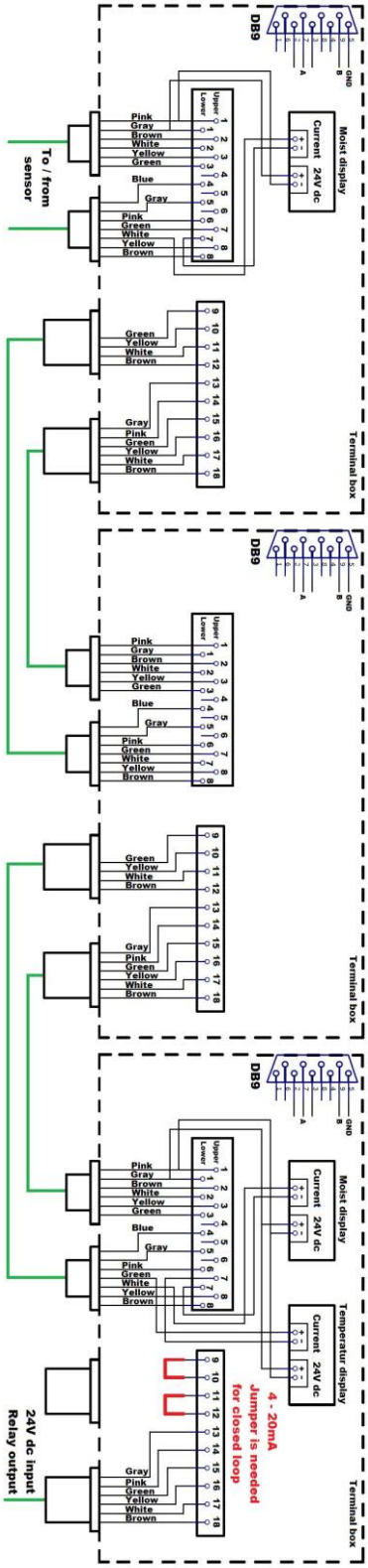

Appendix A8: Install 3 Terminal Boxes with 2 display

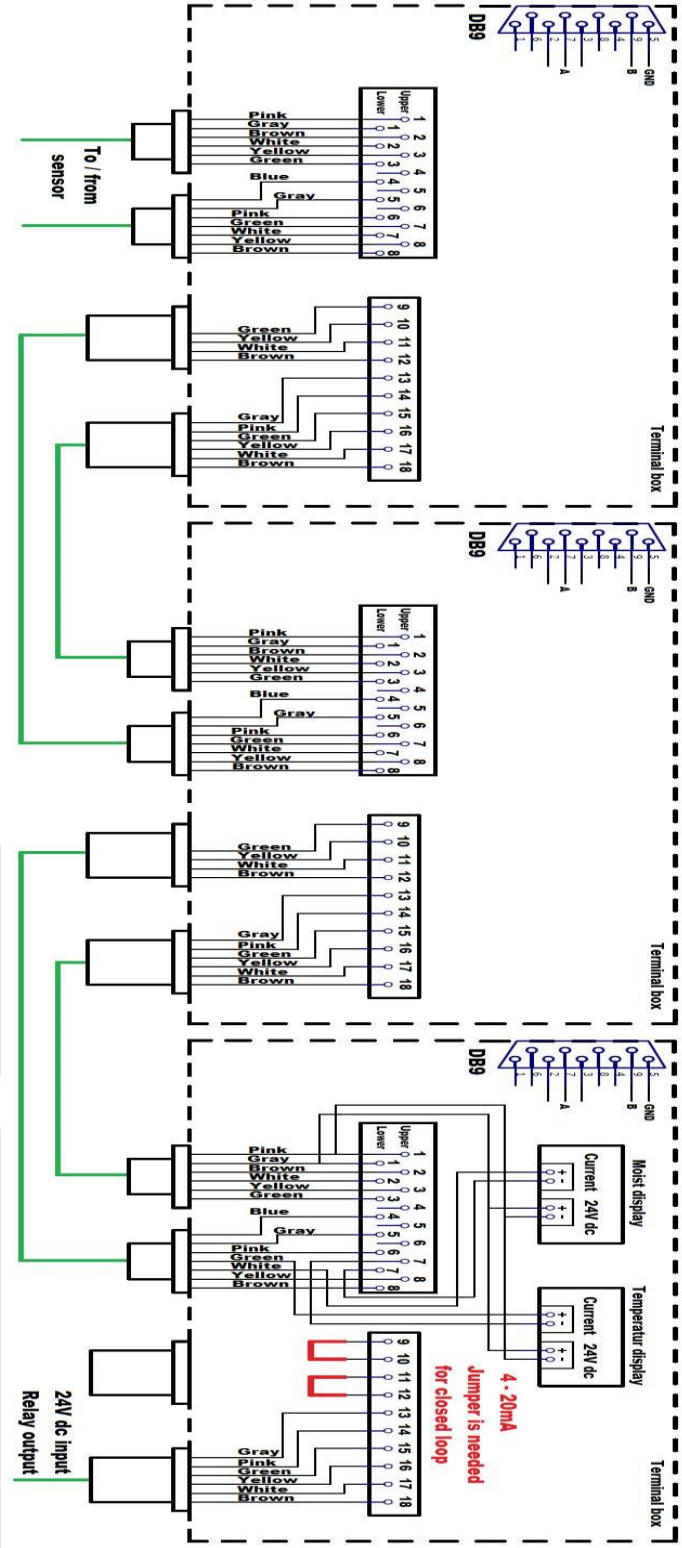

Appendix A9: CABLE Specification

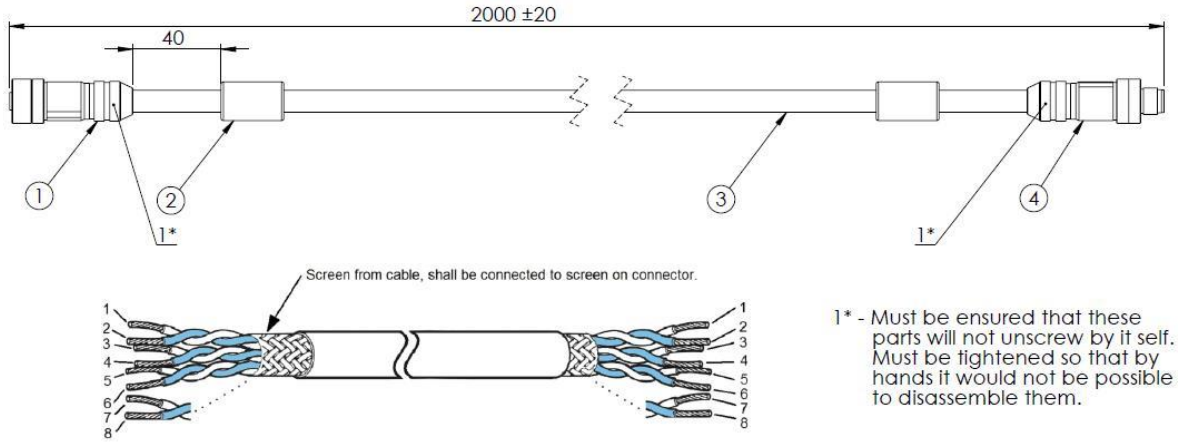

8 pol. Connectors pin layout					
Female			Male		
A	Assignment		B	Assignment	
	Socket	Wire		Plug	Wire
	1	1		1	1
	2	2		2	2
	3	3		3	3
	4	4		4	4
	5	5		5	5
	6	6		6	6
	7	7		7	7
	8	8		8	8

Item No.	Description	Qty.
1	Female Plug	1
4	Ferrite Core	2
2	CL105 4x2x0.75-PO – 2m	1
3	Male Plug	1

How to adjust the display in a WIO/WIOI

When the display is adjusted by PAJ Group, it is adjusted for either **a_W** or **ppm** reading.

a_W reading: 4 mA = .0000 a_W 20 mA = 1.0000 a_W

ppm reading: 4 mA = 0000 ppm 20 mA = * ppm

*If a customer wishes the display to indicate ppm-values, he must specify to PAJ Group:

a) The specific temperature of the sample/medium, at which, WIO/WIOI shall measure.
b) Which ppm-value equals 1.00 a_W, at that specific temperature.

However, a few customers wish to be able to adjust the display or change the **ppm**-value-range of the display.

Here is a description of how to do it:

DISCLAIMER: The warranty of WIO/WIOI is void, if you adjust the display yourself.

Connection diagram

Make a wire connection with two power supply equipments as shown below:

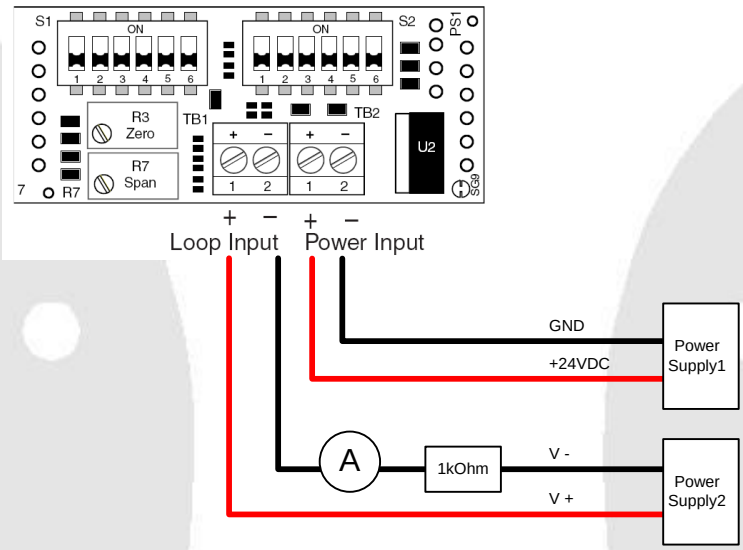

Figure 1

Start condition

Set R3(zero point adjust) and R7(max. point / span adjust) fully clockwise, roughly 20 turns.

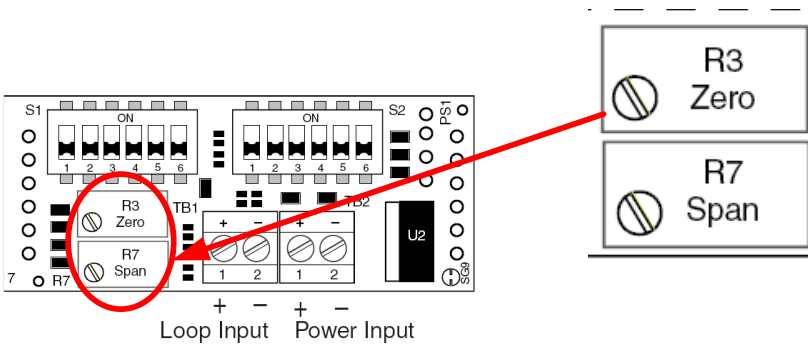

Figure 2

Setting DIP-switches on S1 and S2:

The range/span of the display is set by DIP-switches, located on the back of the display.

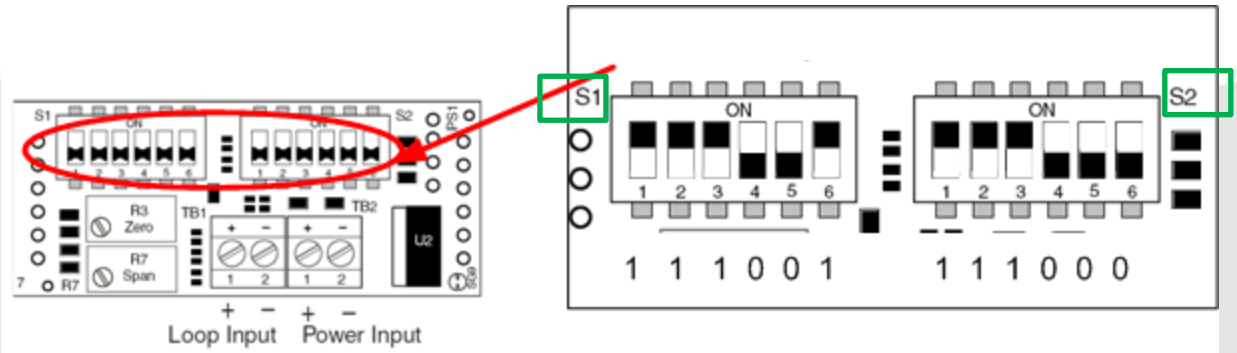

Figure 3

The display in WIO/WIOI is a newer revision, than shown in figure 3. It has a different physical appearance (figure 4), but the DIP-switches have same functionality. The switch-sliders (figure 3) are indicated as black. In reality they are white.

Figure 4

Setting DIP-switches for aW-reading:

Desired readings:
4 mA = .0000 a_W
20 mA = 1.0000 a_W

DIP-switch settings (for a_W):
The switch-sliders are indicated as black. In reality they are white.

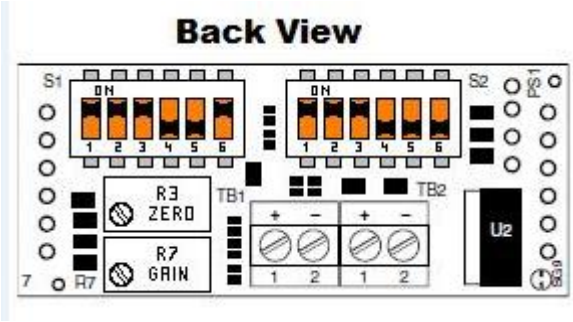

Figure 5

Setting DIP-switches for ppm-reading:

DIP-switches must be set according to Table 1 and Table 2.

Table 1. DIP-Switch Settings

	Display Reading		Switch S1						Switch S2	
			SW1	SW2	SW3	SW4	SW5	SW6	SW1	SW2
	4mA	20mA								
1.	0000	2250-2500	Off	On	On	On	Off	Off	On	On
2.	0000	2500-2800	Off	On	On	On	Off	Off	Off	On
3.	0000	2800-3200	Off	On	On	On	Off	Off	On	Off
4.	0000	3200-3850	Off	On	On	On	Off	Off	Off	Off
5.	0000	3850-4300	On	Off	On	On	Off	Off	On	On
6.	0000	4300-4900	On	Off	On	On	Off	Off	Off	On
7.	0000	4900-5600	On	Off	On	On	Off	Off	On	Off
8.	0000	5600-6200	On	Off	On	On	Off	Off	Off	Off
9.	0000	6200-6800	Off	Off	On	On	On	Off	On	On
10.	0000	6800-7750	Off	Off	On	On	On	Off	Off	On
11.	0000	7750-8600	On	On	Off	On	On	Off	On	On
12.	0000	8600-9850	On	On	Off	On	On	Off	Off	On
13.	0000	9850-11000	On	On	On	Off	Off	On	On	On
14.	0000	11000-12000	On	On	On	Off	Off	On	Off	On
15.	0000	12000-13000	On	Off	Off	On	Off	On	On	On
16.	0000	13000-14000	On	Off	Off	On	Off	On	Off	On
17.	0000	14000-15300	On	Off	On	Off	On	On	On	On
18.	0000	15300-16300	On	Off	On	Off	On	On	Off	On
19.	0000	16300-17800	Off	Off	On	Off	On	On	On	On
20.	0000	17800-20000	Off	Off	On	Off	On	On	Off	On

Table 2. Decimal Point Settings

Switch S2			
SW3	SW4	SW5	SW6
DP1	DP2	DP3	DP4

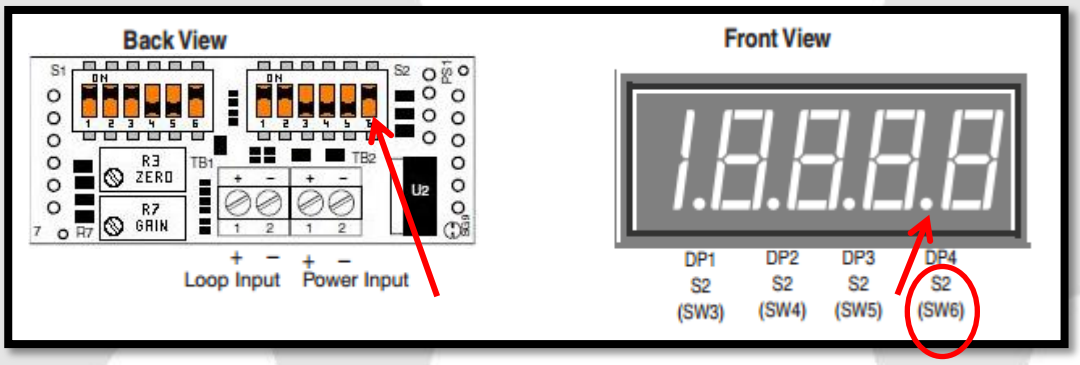

Figure 6

Decimal points 1 through 4 (DP1) is switched ON by setting S2/SW3 through S2/SW6 to ON (see Table 2)

Example (figure 6): Decimal point 4 (DP1) is switched ON by setting S2/SW6 to ON.

Table 1. DIP-Switch Settings

	Display Reading		Switch S1						Switch S2	
			SW1	SW2	SW3	SW4	SW5	SW6	SW1	SW2
	4mA	20mA								
1.	0000	2250-2500	Off	On	On	On	Off	Off	On	On
2.	0000	2500-2800	Off	On	On	On	Off	Off	Off	On
3.	0000	2800-3200	Off	On	On	On	Off	Off	On	Off
4.	0000	3200-3850	Off	On	On	On	Off	Off	Off	Off
5.	0000	3850-4300	On	Off	On	On	Off	Off	On	On
6.	0000	4300-4900	On	Off	On	On	Off	Off	Off	On
7.	0000	4900-5600	On	Off	On	On	Off	Off	On	Off
8.	0000	5600-6200	On	Off	On	On	Off	Off	Off	Off
9.	0000	6200-6800	Off	Off	On	On	On	Off	On	On
10.	0000	6800-7750	Off	Off	On	On	On	Off	Off	On
11.	0000	7750-8600	On	On	Off	On	On	Off	On	On
12.	0000	8600-9850	On	On	Off	On	On	Off	Off	On
13.	0000	9850-11000	On	On	On	Off	Off	On	On	On
14.	0000	11000-12000	On	On	On	Off	Off	On	Off	On
15.	0000	12000-13000	On	Off	Off	On	Off	On	On	On
16.	0000	13000-14000	On	Off	Off	On	Off	On	Off	On
17.	0000	14000-15300	On	Off	On	Off	On	On	On	On
18.	0000	15300-16300	On	Off	On	Off	On	On	Off	On
19.	0000	16300-17800	Off	Off	On	Off	On	On	On	On
20.	0000	17800-20000	Off	Off	On	Off	On	On	Off	On

Table 2. Decimal Point Settings

Switch S2			
SW3	SW4	SW5	SW6
DP1	DP2	DP3	DP4

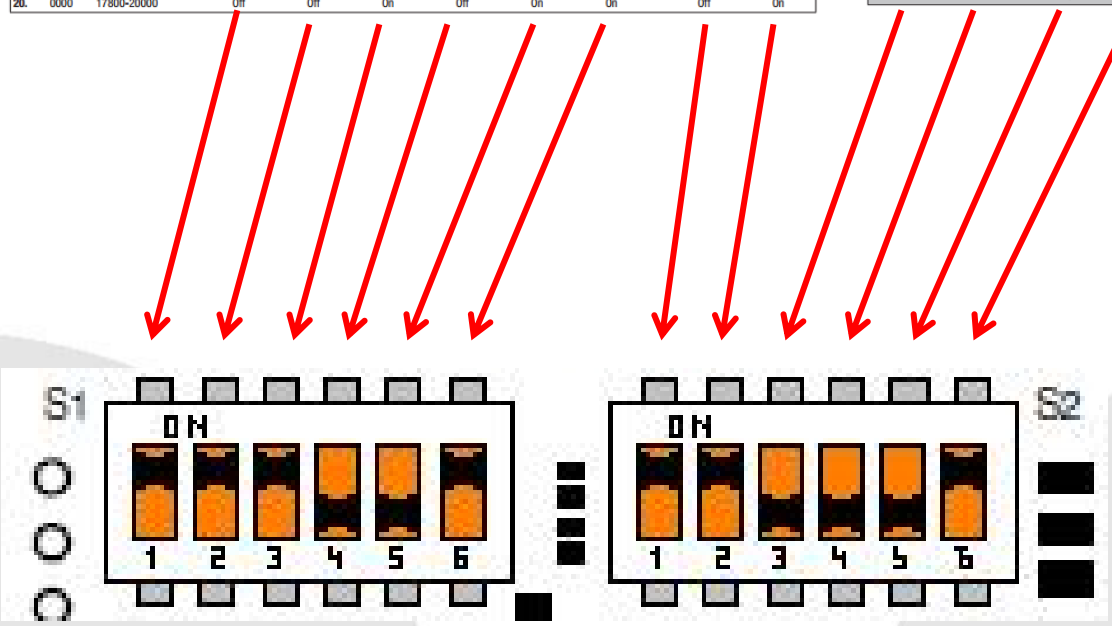

Figure 7

Since these tables can be difficult to overview, we will show a couple of examples:

Example 1:

Desired readings:
4 mA = 0000 ppm
20 mA = 1000.0 ppm

DIP-switch settings:
The switch-sliders are indicated as black. In reality they are white.

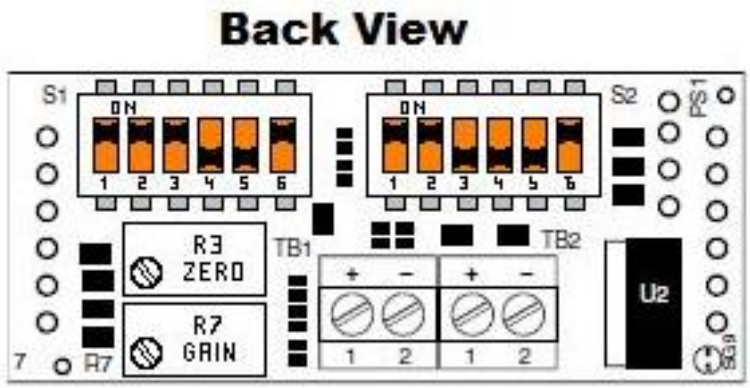

Table 1. DIP-Switch Settings

	Display Reading		Switch S1						Switch S2	
			SW1	SW2	SW3	SW4	SW5	SW6	SW1	SW2
	4mA	20mA								
1.	0000	2250-2500	Off	On	On	On	Off	Off	On	On
2.	0000	2500-2800	Off	On	On	On	Off	Off	Off	On
3.	0000	2800-3200	Off	On	On	On	Off	Off	On	Off
4.	0000	3200-3850	Off	On	On	On	Off	Off	Off	Off
5.	0000	3850-4300	On	Off	On	On	Off	Off	On	On
6.	0000	4300-4900	On	Off	On	On	Off	Off	Off	On
7.	0000	4900-5600	On	Off	On	On	Off	Off	On	Off
8.	0000	5600-6200	On	Off	On	On	Off	Off	Off	Off
9.	0000	6200-6800	Off	Off	On	On	On	Off	On	On
10.	0000	6800-7750	Off	Off	On	On	On	Off	Off	On
11.	0000	7750-8600	On	On	Off	On	On	Off	On	On
12.	0000	8600-9850	On	On	Off	On	On	Off	Off	On
13.	0000	9850-11000	On	On	On	Off	Off	On	On	On
14.	0000	11000-12000	On	On	On	Off	Off	On	Off	On
15.	0000	12000-13000	On	Off	Off	On	Off	On	On	On

Table 2. Decimal Point Settings

Switch S2			
SW3	SW4	SW5	SW6
DP1	DP2	DP3	DP4

Example 2:

Desired readings:
4 mA = 0000 ppm
20 mA = 4700 ppm

DIP-switch settings:
The switch-sliders are indicated as black. In reality they are white.

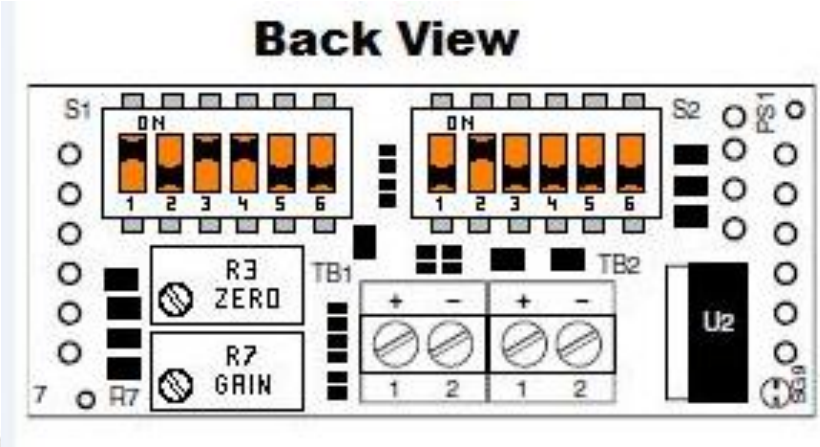

Table 1. DIP-Switch Settings

	Display Reading		Switch S1						Switch S2	
			SW1	SW2	SW3	SW4	SW5	SW6	SW1	SW2
	4mA	20mA								
1.	0000	2250-2500	Off	On	On	On	Off	Off	On	On
2.	0000	2500-2800	Off	On	On	On	Off	Off	Off	On
3.	0000	2800-3200	Off	On	On	On	Off	Off	On	Off
4.	0000	3200-3850	Off	On	On	On	Off	Off	Off	Off
5.	0000	3850-4300	On	Off	On	On	Off	Off	On	On
6.	0000	4300-4900	On	Off	On	On	Off	Off	Off	On
7.	0000	4900-5600	On	Off	On	On	Off	Off	On	Off
8.	0000	5600-6200	On	Off	On	On	Off	Off	Off	Off
9.	0000	6200-6800	Off	Off	On	On	On	Off	On	On
10.	0000	6800-7750	Off	Off	On	On	On	Off	Off	On
11.	0000	7750-8600	On	On	Off	On	On	Off	On	On
12.	0000	8600-9850	On	On	Off	On	On	Off	Off	On
13.	0000	9850-11000	On	On	On	Off	Off	On	On	On
14.	0000	11000-12000	On	On	On	Off	Off	On	Off	On
15.	0000	12000-13000	On	Off	Off	On	Off	On	On	On

Table 2. Decimal Point Settings

Switch S2			
SW3	SW4	SW5	SW6
DP1	DP2	DP3	DP4

Zero point adjustment

Set PowerSupply1 to 24VDC and switch ON.
Set PowerSupply2 to 4V (1V/(1kOm +$R_{display)}$ = 1mA) and switch ON.

Adjust PowerSupply2 until the Ampere meter indicates 4.00 mA.

Adjust R3 potentiometer until the display reads **“0000”**

Max. point adjustment

Set PowerSupply2 to 20V.

Adjust PowerSupply2 until the Ampere meter indicates 20.00 mA.
Notice: The signal from the WIO/WIOI Sensor to the Terminalbox/display, is as follows:
20 mA = 1.0000 a_W = 100 %RH (=)* The desired max.-ppm-value adjusted on display

*ppm-displayadjustment will only be correct at 1 specific temperature measured in a medium, which has the desired max.-ppm-value (= 1.0 a_W) at this specific temperature.

Adjust R7 potentiometer until the display reads **“1.0000”** (or **desired max.-ppm-value**), as shown below:

END OF SETTING

Remove the display from power supply equipments.

The display is now ready for reading the analog signal from 4mA up to 20mA and it is configured for the indication
from 0.0000 to 1.0000 a_W or
from 0000 to desired max.-ppm-value

Appendix A10: Error / failure FAQ

Failure type	Description	Possible reasons
PPM display failure	Display shows only negative numbers	1. Sensor is not connected. 2. The error caused by missing jumper in terminal box pin 11 and pin 12. See Appendix A1 3. Check that the jumper is properly installed, it is seen that the jumper has been installed but the jumper had no proper connection 4. The wires are reversed in terminal box pin 7 and pin 8 lower part. After changing and there is no change in the display, then the fault is either 1, 2 or 3.
a_w display failure	Dispay shows only negative numbers	1. Sensor is not connected. 2. The error caused by missing jumper in terminal box pin 11 and pin 12. See Appendix A1 3. Check that the jumper is properly installed, it is seen that the jumper has been installed but the jumper had no proper connection 4. The wires are reversed in terminal box pin 7 and pin 8 lower part. After changing and there is no change in the display, then the fault is either 1, 2 or 3.

Dead display	Display indicate nothing	Maybe is 24V dc supply interrupted to the display. There shall be 24V dc at this connector. 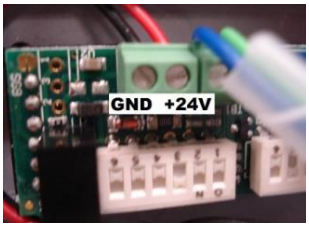
Relay	Relay-state while alarm is on	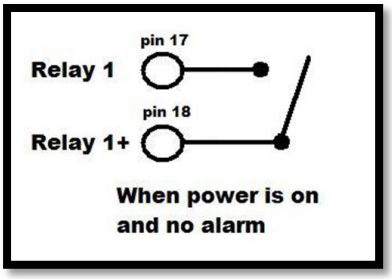 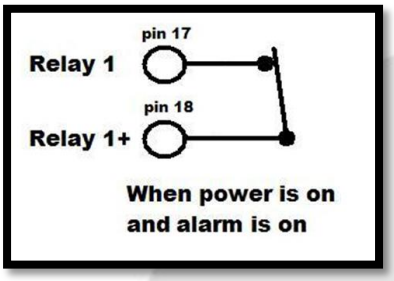
Sensor	How to check the mA output from sensor? 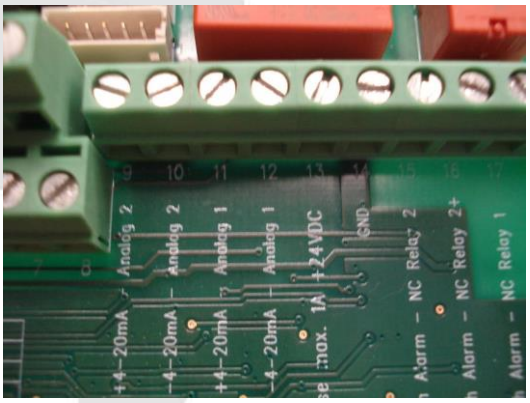	Remove jumper in pin 11 and pin 12. In order to ensure that there can be measured mA must pin 11 and pin 12 must be screwed. Remember to set the measuring instrument in dc mA and connect test leads correctly in the measuring instrument. Sensor is alright when measuring a value between 4 and 20 mA. Is the result about 2 mA then there is an internal sensor error, so the sensor must be sent for repair. Is the result 0 mA, tjek if the sensor get 24 Vdc power.

Dip Switch a_w	Are the dip switches still positioned correctly?	Correct positions: 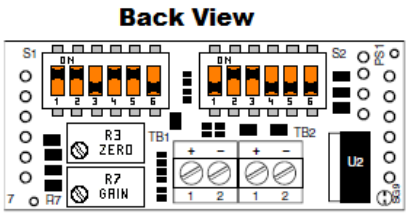
Dip Switch PPM	Are the dip switches still positioned correctly?	Correct positions: 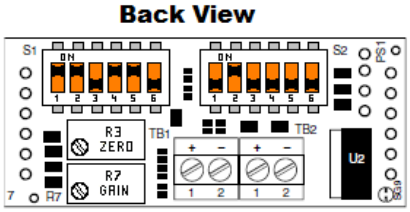
Broken cables between Sensor and terminal box	No mA will can be measured on: Analog 1: Terminal 11 and 12 and Analog 2: Terminal 9 and 10	

Company Information

PAJ Sensor A/S
Grundtvigsallé 163
DK-6400 Sønderborg
Tel: (0045) 7443 7181
Mail: paj@paj.dk

D80-105-0020-00